Open Share Copy link ··· Kevin Roberts Committ....pdf

SANTA MONICA COMMUNITY COLLEGE DISTRICT
Faculty Evaluation Summary Form For Probationary Faculty
Year One

NAME: Kevin Roberts	DEPARTMENT: Physical Sciences

Overall Rating		Recommendation	
○	Satisfactory	○	Not Enter Into A Contract For The Following Academic Year
●	Needs Improvement	●	Enter Into A Contract For The Following Academic Year
○	Unsatisfactory	○	Employ The Probationary Employee As A Regular (Tenured) Employee For All Subsequent Academic Years

Signature		Date
Dept. Peer: Emin Menachekanian	Emin Menachekanian	12/13/2022
Non-Dept. Peer: Keith Ouellette	Keith Ouellette	12/13/2022
Dept. Chair, faculty leader, or designee: Sehat Nauli	Sehat Nauli	12/13/2022
Senior Administrator: Lydia Ayala	LYDIA AYALA (Dec 13, 2022 15:35 PST)	12/13/22
Evaluatee: Kevin Roberts	Kevin F Roberts	12/13/22

Faculty member's signature does not necessarily imply agreement. It is merely an acknowledgement that the complete report has been read and a copy received.
Comments: (optional)

1 of 1

PROFESSIONALISM FORM

Evaluation of: Kevin Roberts Semester: Fall 2022

Department: Physical Sciences

Evaluator: Sehat Nauli Position: Dept. Chair

This section to be completed by the department chair / leader or department chair/ leader designee *As input to the evaluation procedure*	Satisfactory or Better	Needs Improvement	Unsatisfactory	Not Observed (NO) Not Applicable (NA)
1. Demonstrates cooperation and sensitivity in working with colleagues and staff	●	○	○	○
Comments: See comments in attached sheets.				
2. Responsive to constructive feedback	○	○	○	●
Comments: This is the first term that Prof. Roberts is evaluated as a FT faculty. There is a number of feedback listed on the attached pages for him to implement. In his future evaluation, I will check how he responds to the feedback given in this evaluation.				
3. Participates at the appropriate level in creation, assessment, and / or discussion of SLOs	●	○	○	○
Comments: In past semesters as a PT faculty, Prof. Roberts was an active participant in the Physics program meetings.				
4. Submits required departmental reports and information on time (Drop roster, grade roster, flex form)	●	○	○	○
Comments: Prof. Roberts submitted all the required information: office hours, syllaby, and flex on time.				
5. Maintains adequate and appropriate records	○	○	○	●
Comments: This is a note that exams and grade records must be kept for 2 years at minimum in case of grade appeal. Even though it is not an observation, it is something I want Prof. Roberts to know.				
6. Observes health and safety regulations	●	○	○	○
Comments: Prof. Roberts and all his students wore masks during my visit.				
7. Per the collective bargaining agreement, maintains office hours and attends required meetings	●	○	○	○
Comments: I have seen Prof. Roberts in his office hours as well as in department meetings.				

8. Responsive to students and is accessible to students	●	○	○	○
Comments: In my classroom visits, I saw that his students felt comfortable asking questions to him. His Canvas shell also had a Discord link where he's also a member so he could answer students' questions. From these, I surmise that Prof. Roberts is responsive and accessible to his students.				
9. Adheres to departmental and college policies	●	○	○	○
Comments:				
10. Participates in departmental and campus wide activities	●	○	○	○
Comments: Prof. Roberts is part of SMC's New Faculty Institute (2022-23 year) and a participant in the NSF STEM grant starting in Spring 2023.				
11. Maintains currency in professional knowledge through professional literature, professional memberships, workshops, conferences, or other activities	○	○	○	●
Comments: I am not aware of any professional workshops or conferences that Prof. Roberts attends but this could definitely be a topic of discussion in the evaluation conference.				
Additional comment: Please see the attached sheet for additional comments.				

Conference Date: October 25, 2022

Evaluator's Signature: Shat Nand

Evaluatee's Signature: Kevin Gratton Roberts

Faculty member's signature does not necessarily imply agreement. It is merely an acknowledgement that the complete report has been read and a copy received.

FACULTY OBSERVATION FORM

Evaluation of: Kevin Roberts Semester: Fall 2022

Department: Physical Sciences

Evaluator: Sehat Nauli Position: Dept Chair

Knowledge, Skill and Ability as an Instructional Faculty Member	Satisfactory or Better	Needs Improvement	Unsatisfactory	Not Observed (NO) Not Applicable (NA)
1. Establishes a student-instructor relationship conducive to learning	●	○	○	○
Comments:				
2. Communicates ideas clearly and effectively	○	●	○	○
Comments: I find the lecture a bit disjointed in the sense that they are just independent topics. It is useful to create an overall theme for a given chapter (or several chapters) and then at each lecture, reminding students of the overall theme and how a particular topic relates to that theme.				
3. Stimulates students' interest and desire to learn	●	○	○	○
Comments: In one session, the topic of multimeter was discussed and students seemed to be interested and Prof. Roberts followed up with specific discussions. In the second session, the RC discussion was not engaging and went fast.				
4. Promotes active involvement of students in learning activities	○	●	○	○
Comments: Prof. Roberts does not necessarily engage students, but students do seem to feel comfortable with asking questions. In the first session, there were more student-faculty interaction, in the second, there was none.				
5. Demonstrates sensitivity in working with students from diverse backgrounds and with different needs	○	○	○	●
Comments:				
6. Employs appropriate pedagogy	○	●	○	○
Comments: I would like to see a bit more problem solving incorporated in class. I did not see any in the two sessions I visited. By chance, I saw Prof. Roberts in his office hours in the Science faculty workroom and he was working through problems with students. I'd like to see a similar session during class.				
7. Begins class promptly and ends at time designated on schedule of classes	●	○	○	○
Comments:				
8. Uses class time efficiently	●	○	○	○
Comments:				

9. Maintains an appropriate pace during class session	●	○	○	○
Comments: Pace seems ok, but in the second class visit, I found the derivation of the formula to be quite fast. There were some students who seemed confused where I was sitting but they didn't ask questions.				
10. Provides students with a syllabus which includes a written explanation of the evaluation process, expectations and requirements, assignments, course content, relevant dates, and other information	○	●	○	○
Comments: The syllabus that is posted in Canvas has information that is different from other links in Canvas. Please see my extended comments in the attached pages.				
11. Teaches course content that is consistent with the official course outline of record	●	○	○	○
Comments:				
12. Uses materials pertinent to the course content	●	○	○	○
Comments:				
13. Teaches at a level that is appropriate to the course content	●	○	○	○
Comments:				
14. Has appropriate command of the subject matter to be able to respond to students' needs	●	○	○	○
Comments: Prof. Roberts was quite comfortable in answering various students questions on the topic of multimeter in the first visit that I made to his class.				
15. Assesses students' progress regularly	●	○	○	○
Comments: There's a weekly chapter test. I would recommend a combination of low-stakes quizzes and some cumulative tests to prepare students better for transfer.				

Additional comment:

This is Prof. Roberts first evaluation. I've attached a more extended description of both of my classroom visits. I think there is a lot of room for improvement, which I hope will be taken as constructive inpltuts. Most first year probationary faculty have a hard time adjusting to teaching full time versus part time. The department holds FT faculty to a higher standard which is the spirit of the comments in my observation. I look forward to discussing my observation with Prof. Roberts at the evaluation conference.

Date(s) of Visit: 10/5/22 and 10/14/2022

Length of visit: 1 hr 45 min Course (if applicable): Physics 22

Conference Date: 10/25/2022

Evaluator's Signature: Sohail Nouri

Evaluatee's Signature: Kevin F Roberts

Faculty member's signature does not necessarily imply agreement. It is merely an acknowledgement that the complete report has been read and a copy received.

Classroom Evaluation Notes for Professor Kevin Roberts by Sehat Nauli

I visited Professor Roberts's Physics 22 class on Wednesday, October 5 and Friday, October 14, 2022. Below are notes from each visit and a conclusion based on both visits.

First Evaluation Visit (9:35 am – 10:35 am)

Prior to the visit, I was a bit confused with the class schedule in Canvas, with respect to laboratory meetings. A Word document of the syllabus states that "Labs will be held each Friday...". However, in a Canvas link titled *Laboratory guidelines*, I read that "Labs will be held each Wednesday...". When I asked, Prof. Roberts informed me that he "tends to have labs" on Wednesday. Another Canvas link titled *Tentative Course Schedule* shows that Exp #7 was scheduled for October 5. The inconsistent information confused me as an evaluator, and I would imagine it is also confusing to students. I strongly recommend that Prof. Roberts provide one link or document where the class schedule is listed. If there are many links, he needs to make sure that they are all consistent with each other.

I came in at 9:35 am and Prof. Roberts was handing out a worksheet that he would go through in the class. I counted 14 students in attendance. Two more students joined in the next five minutes. The class roster shows that 29 students are currently enrolled, so I am wondering where the other half of the class was. The syllabus states that "attendance is mandatory and students will be dropped for repeated, unexplained non-attendance". The syllabus also asks students to "meet with the instructor if they miss more than 3 classes". I am curious to know how often the students had been absent and whether Prof. Roberts had met with them.

On a related note, if October 5 was a laboratory day with Exp 7 scheduled, did the absent students make up the experiment on another day? The class is fully on-ground and hands-on experimentation is assumed to be an integral part of the course. A student who misses a specific number of laboratory exercises can be thought of as not completing the course and therefore cannot pass the class. I would be interested to learn if Prof. Roberts has a policy regarding lab absences.

Prof. Roberts made an announcement at the start of class to indicate that on the final exam date, students will be given an optional exam. The idea is that if students want a higher grade, they have the option to take that exam, while if they are content with their grade before that date, they can skip the exam. A few students asked how the grade of the optional exam will be incorporated into the class grade. Prof. Roberts did not seem to anticipate the questions, so he gave an on-the-spot answer that did not sound clear to me. My recommendation is for him to think through any change that impacts grades or exams because these changes often become grade appeal issues if students consider the changes to be disadvantageous to them. I recommend Prof. Roberts consult with other colleagues for suggestions prior to announcing a change to students.

Although Prof. Roberts and the 14 students were in a classroom, he also had a Zoom session running that is projected on the class screen. I saw a few students with their tablets or laptops on the Zoom app. This class arrangement mimics the hyflex class structure that SMC is piloting for some courses. I'm interested to know if there are students who are attending through Zoom instead of coming to class and whether that explains the low attendance. I commend Prof. Roberts's experimentation with the hyflex structure. This may be a structure that will be explored for future physics classes. However, given that the current class is scheduled as a fully on-ground class, Prof. Roberts should explain to students that they need to be present in class even though Zoom recording of the class is made available.

Prof. Roberts went through a discussion of electromotive force, circuits, and the multimeter. I'll just note some of my observations below:

1. There were technical issues with the setup of two devices on the projector and some time was used to set these up. I recommend Prof. Roberts come earlier to lecture to set these devices up if he plans to do a hyflex-type lecture.
2. The size of the fonts on the projector was too small to see where I was seated at the back of Sci 122. Prof. Roberts should set up his lecture then walk to various parts of the room to make sure that students can view the projector clearly. Alternatively, he could ask students if they could read the text clearly.
3. Prof. Roberts was very focused on writing things down on the tablet and switching between the two devices that he had on the bench. As a result, there was little attention paid to the students. I recommend that he checks for understanding every 5-10 minutes to make sure he engages the students.
4. There were two instances where he wrote something on the screen and then scrolled down which prevented students from writing the information down. If he did not want students to write down anything, he should make sure to let students know.

Despite some of the issues noted above, there were several occasions where students asked Prof. Roberts questions. Students seemed comfortable in asking questions and Prof. Roberts showed students some of the equipment that would be used for the experiment while he was lecturing. He had a positive and welcoming attitude to students' questions and was quite comfortable in pivoting to answer questions that students were curious about.

Second Evaluation Visit (11:15 am – 11:45 am)

I visited Professor Roberts's Physics 22 class on Friday, October 14, 2022. The class started at 11:15 a.m. in Science 175. I left when the class started their weekly test.

One difference I noticed with this visit was that most of the students were present. Of the 29 students in the roster, 25 students were present at the start. The high attendance is likely because it was a test day.

Prof. Roberts taught about RC circuits, which I believe is new material for the class. He went through the conceptual part quickly on the projector and stopped on an electric charge equation. He proceeded to derive the equation on the whiteboard. There was very little student interaction in this session compared to the last one I attended. My guess is because students were anxious about the exam and probably could not focus on the lecture. It might be better to have the lecture after the test or perhaps have a different testing schedule.

Based on the lack of student interaction in this visit, I also recommend that Prof. Roberts break lecture up a bit with some problem-solving activity. So perhaps lecture for 15-20 minutes, then work on a problem to illustrate the concept that he just lectures on. Alternatively, he can demonstrate the idea that he just lectures on, perhaps using a circuit board on the document camera or a YouTube video.

Lastly, there were three students sitting at the back of the room who continuously whispered to each other during the 30-minute period I was in class. I could hear them clearly and the noise distracted me from paying attention to Prof. Roberts' presentation. I assume other students sitting at the back experienced the same issue. I did not see Prof. Roberts say anything, so perhaps he did not hear these students from where he's standing at the

front of the class. He should be more aware of these types of classroom distractions. I would recommend that he checks for understanding more often, which typically will also break any type of student chatting. It is also important to inform students that they could chat with each other during problem-solving times, but during lecture time the class should be quiet so that all students can follow along and ask questions as needed.

Conclusion from both visits

Overall, Prof. Roberts seems like an easygoing instructor. Student interactions were much more frequent in my first visit compared to the second.

I want to see more problem-solving sessions during lecture. With a class such as Physics 22, application of concepts either through calculations, videos or other means, is critical to understanding. Prof. Roberts did not do any problem solving in either session I attended. Much of the lecture material on the screen seemed to be copied directly from the textbook and arranged on-the-spot during lecture. I would recommend the following organization: lecture for 15-20 minutes, work on a sample problem on the board or tablet, have students work on another problem on the same concept while Prof. Roberts walks around the room to check for understanding.

One of the major issues is the inconsistencies in the syllabus and Canvas schedule. In addition to the lab schedules, the weekly chapter test was changed from Monday to Friday, but the syllabus still shows Monday. One or two inconsistencies are minor problems, but when they appear repeatedly, they interfere with the learning process because students end up spending time trying to figure out the logistics of the class rather than learning the class material. When there are revisions to the class schedule, number of exams, grading process and so on, the syllabus should be updated and the revised syllabus should be uploaded to mProfessor. Class syllaby are often requested by students after they leave SMC so they may get transfer credits for specific courses. Having the correct syllabus determines whether a student gets their transfer credits or not. I recommend that Prof. Roberts look at the SMC Model Syllabus and see if he could use some or part of the model syllabus as a guide to his future syllabus.

Prof. Roberts has weekly chapter tests as opposed to multichapter exams. I'm assuming this is to reduce the number of high stakes exams. However, since most SMC Physics 22 students end up transferring to 4-year universities where exams are still carried out as one to two midterms plus a final, students should also be exposed to multichapter tests in Physics 22. An effective approach could be to combine the smaller chapter tests (or quizzes) with larger multichapter exams. That way students can accumulate some points through the smaller quizzes but also be prepared for handling the multichapter exams when they transfer.

This is Prof. Roberts's first evaluation as a FT faculty and as is common with most first year probationary faculty, there are several areas he can improve on by the next evaluation. My recommendations are listed above and I look forward to discussing some of the issues I noticed at the evaluation conference.

Evaluation Conference Notes (to be completed after the conference with Evaluatee)

Prof. Roberts and I met on October 25 to discuss his evaluation. He was very receptive to the feedback in my evaluation. In fact, upon receiving the written evaluation, he updated his Fall 2022 syllabus using the SMC Model Syllabus as a template. He also clarified the parameters for the optional final in Physics 22. The updated syllabus is now in his Fall 2022 Canvas shell.

We discussed a number of issues in the evaluation and Prof. Roberts indicated that he would make the following changes in future semesters:

1. He would incorporate some type of method to encourage attendance in the classroom. We discussed if his lecture recording may have caused students not to come in, so I recommended that he provide students with a lecture note with some portions of it left blank for students to complete while they're attending lecture in class.
2. He would like to split the class concepts in several major themes to connect materials from several chapters so the lecture does not feel too disjointed. He mentioned that in Physics 22 it could be divided into the theme of electric field, circuits, magnetism, and so on. I fully support this idea.
3. He said that he has problem-solving sessions with students, but would like to make it a regular part of his lecture where after 15-20 minute of lecture, students get to put the concepts into applications either through problem solving or demonstration. We both think that this structure will help in breaking the monotony of long lectures.
4. He plans to combine materials from a few chapters into one test, so going with a more standard assessment schedule of 3-4 exams plus a final. This will also provide him with a bit more time to do problem-solving students with students.

Overall I find Prof. Roberts to be open to my suggestions. I look forward to see him incorporate these changes in his future classes.

FACULTY OBSERVATION FORM

Evaluation of: Kevin Roberts Semester: Fall 2022

Department: Physical Sciences

Evaluator: Emin Menachekanian Position: Associate Professor of Physics

Knowledge, Skill and Ability as an Instructional Faculty Member	Satisfactory or Better	Needs Improvement	Unsatisfactory	Not Observed (NO) Not Applicable (NA)
1. Establishes a student-instructor relationship conducive to learning	●	○	○	○
Comments:				
2. Communicates ideas clearly and effectively	○	●	○	○
Comments: Please see the attached narrative about this, as there were many instances in which certain topics were not necessarily presented in a clear, effective, or pedagogically sound manner, particularly given the rapidity with which some of the content was being presented and abruptly concluded.				
3. Stimulates students' interest and desire to learn	●	○	○	○
Comments:				
4. Promotes active involvement of students in learning activities	●	○	○	○
Comments:				
5. Demonstrates sensitivity in working with students from diverse backgrounds and with different needs	●	○	○	○
Comments:				
6. Employs appropriate pedagogy	○	●	○	○
Comments: The style of teaching and the tools being used are perfectly fine, but I think there's certainly more that can be done in terms of, for example, incorporating qualitative descriptions of topics to make the content more accessible, or spending a little more time on the details of topics in order to make the exposition more thorough and generally more meaningful. Please see the narrative for more description.				
7. Begins class promptly and ends at time designated on schedule of classes	●	○	○	○
Comments:				
8. Uses class time efficiently	●	○	○	○
Comments:				

9. Maintains an appropriate pace during class session	○	●	○	○
Comments: In line with some of the previous comments within this form, some of the lecture topics being covered were done so at a very fast pace, scarcely doing much justice to the proper development of the topics themselves. Please see the narrative for more details.				
10. Provides students with a syllabus which includes a written explanation of the evaluation process, expectations and requirements, assignments, course content, relevant dates, and other information	●	○	○	○
Comments: The syllabus is put together very well. Given its length, it is quite daunting to read through, particularly for the student, but having it linked up on Canvas so nicely ends up alleviating some of the issues of it being so all-encompassing.				
11. Teaches course content that is consistent with the official course outline of record	●	○	○	○
Comments:				
12. Uses materials pertinent to the course content	●	○	○	○
Comments:				
13. Teaches at a level that is appropriate to the course content	●	○	○	○
Comments:				
14. Has appropriate command of the subject matter to be able to respond to students' needs	●	○	○	○
Comments: Prof. Roberts happily answers questions in an accurate and respectful manner, and is very capable of troubleshooting things, as described in the lab observation within the attached narrative.				
15. Assesses students' progress regularly	●	○	○	○
Comments:				

Additional comment:
The attached narrative provides an in-depth analysis of what was observed on the various observation dates. Please take a look at it in order to sense the rationale behind why the marks on this observation form were made the way that they were.

Date(s) of Visit: 10/14/22 (30 minutes); 10/26/22 (55 minutes); 10/28/22 (25 minutes)

Length of visit: 110 minutes Course (if applicable): Physics 22

Conference Date: 11/22/2022

Evaluator's Signature: [illegible]

Evaluatee's Signature: Kevin F Roberts

Faculty member's signature does not necessarily imply agreement. It is merely an acknowledgement that the complete report has been read and a copy received.

Narrative on the Observation of Prof. Kevin Roberts

Emin Menachekanian

November 16, 2022

Santa Monica College

Department of Physical Sciences

Three observations took place for Prof. Roberts for his Physics 22 class in Fall 2022, summarized in the table below.

Date	Class	Class Type	Location	Observed Time	Duration [Minutes]
Friday, 10/14/22	Physics 22	Lecture	SCI 157	11:15 am - 11:45 am	30
Wednesday, 10/26/22	Physics 22	Lab	SCI 122	11:20 am - 12:15 pm	55
Friday, 10/28/22	Physics 22	Lecture	SCI 157	11:20 am - 11:45 am	25

The following narrative will break up the observations into two groups: (1) lecture observations which took place on Friday, 10/14/22 and Friday, 10/28/22; and (2) the single lab observation which took place on Wednesday, 10/26/22.

Before jumping into what was observed in more detail, as an overview, it's definitely clear that Prof. Roberts is passionate about the content, and also very willing to help his students succeed. For instance, he is very excited to present the content and to apply it to everyday experiences. He has made a lot of effort to connect with students, whether through generating more office hours to answer questions, or through making review sessions to prepare students for tests, or through happily and willingly wanting to answer students' questions in lecture and lab settings.

That being said, I think that some things can certainly be improved upon. For one, there was a lot of flip-flopping with respect to scheduling, particularly as it pertained to the dates and content of tests. At one point, a survey was sent to gauge students' interest in taking fewer tests with higher stakes for the grade, or in taking more tests with lower stakes for the grade, even though the semester had started out with the latter rather than the former. Moreover, even though the latter testing style was continued for the rest of the semester, there were a lot of instances of test dates being moved around, making it likely quite difficult for students to manage their schedules to ensure they'd be able to attend without any drawbacks. Granted, students are expected to attend all classes within this on-ground setting, but realistically—especially given the nature of how Covid has reshaped our world—having those schedules changed for a large number of tests could cause a lot of pressure for schedules to be adjusted accordingly. Also, because a huge effort was made to try to follow the content schedule fully for testing on specific chapters at some point, a lot of this may have come at the cost of not necessarily spending enough time to properly cover the content in a meaningful way. Indeed, one of the main gripes I have involves the pace with which Prof. Roberts pushes through the material, which, in turn, adversely affects the clarity, effectiveness, and overall meaningfulness of the content that is being presented. This will be described in more depth soon, among other things.

The writing to follow will aim to paint a picture of what has been described in this overview, while providing some comments and critiques of how the material was presented and actively implemented. Ultimately, for the record, I'd like to just say that I always take this evaluation process to be one where my main intention is to help the evaluatee by giving as much feedback as possible for the end-goal of hopefully having these opinions shape the evaluatee into a much better instructor. I am by no means claiming that I am an expert, as I myself know that I have much room for improvement. Nevertheless, my point here is that this evaluation narrative is not meant to be adversarial, but rather a narrative that provides criticism with the intent of fostering the growth of faculty, which will inevitably happen over time. In other words, as an evaluator, my primary objective is to serve as a mentor of sorts, as that is, what I believe, makes this evaluation process healthier and more conducive to the overarching mission that all teachers share: namely, to improve how well we can serve our wonderful community of students.

Lecture Observations (Friday, 10/14/22 and Friday, 10/28/22)

Prof. Roberts' lecturing style involves a combination of presenting prepared content slides using a computer paired with the classroom projector, as well as using the whiteboard for displaying additional pieces of information, such as deriving certain results, emphasizing certain notions, or providing alternate diagrams and/or words to explain things differently. It's clear that he has a good handle on being able to switch between the projector and the whiteboard effectively, and his handwriting and organization on the whiteboard makes things easy to follow.

For both lecture observations, the lecture portion of the class was to be followed by an hour-long chapter test, which is why the observation window lasted around 30 minutes for each of these observations. To start off, it was quite apparent that many students were not really paying attention to the content being presented on both of the days. The content being covered involved new material, while the exam would be testing them on past content. As such, a good number of students were arriving to class quite late, perhaps because they were favoring a later arrival to have some more time to focus on the material on which they would be tested toward the latter part of the class. In addition, a good chunk of those students that were present were not really paying attention to the content being presented, likely to cram some last-minute information to prepare themselves for the test that was soon to follow. It's not to say that covering new content prior to the taking of an exam is a bad thing, but that choice does come with some issues (as described above). Especially if what is being covered prior to the test's commencement is quite crucial, it might be more beneficial to defer that presentation to a time when the students are less distracted from the pressure of taking an exam. Granted, with these Friday classes being only 90 minutes long, it might be difficult to employ another tactic of switching the ordering: having students take the exam first, then moving on to new content. However, if the class-time was longer, then it would make sense to flip things around. Indeed, at least from my experience, I have found that students are more invested with the content when the exam is behind them rather than the other way around. Nevertheless, these are just some suggestions to ponder, particularly when trying to fit too many things into a relatively short class meeting.

To that end, I think this latter point of doing too many things within one class also speaks to how the content during the observation was being presented in the first place. To me, it felt quite rushed and, as a result, quite difficult to follow, particularly given that most students were seeing this content being formally presented to them for the first time in their lives. In that sense, I know that Prof. Roberts was trying to follow the schedule as much as possible, and I think that is certainly commendable; however, one must inevitably weigh the cost of rushing through content versus spending more time on it, but with a more pedagogically sound structure with respect to presenting things. Indeed, going through the content more carefully will take more time and lead to the desired schedule not being followed as closely, but is that necessarily a bad thing? I mean, in the end, one of the paramount aims should be to teach students about how to think like a physicist, so that if achieving this goal comes at the cost of not necessarily covering all facets of the course content, then I feel as though this is okay. Personally, I'd rather have my students go through the content more deeply, as even if this comes at the cost of reducing the breadth of content covered, at least they are better equipped to put the pieces together for the topics that were not covered when there's a need for it in the future. To this point, I'd like to describe some aspects of what was done during the observations that, I hope, would support being less concerned about breadth of content covered but more invested about mindfully and respectfully presenting material to make it more comprehensible and, thus, more meaningful.

On Friday, 10/14/22, Prof. Roberts spent the first five minutes of class discussing galvanometers and their use as ammeters (for measuring current) or voltmeters (for measuring potential differences) within circuits. To be honest, it was extremely hard to follow, even for me, as to what he was trying to achieve and ultimately illustrate with this topic. My guess is that he was trying to address why galvanometers can be made to detect voltage and current when used in different ways, but, to be honest, there was really no detail used to describe precisely how it achieves these goals. Indeed, apart from some figures showcasing its use in these ways, nothing further was described about what specific features would lead to a deflection on the galvanometer being interpreted in the ways that were desired. In that sense, I firmly believe a 5-minute discussion on this topic was not sufficient at all. Although it was mentioned that the principle of why a deflection occurs within the galvanometer will be better understood in the future with a full discussion of magnetism, it seems a bit off-putting to talk about using a device to make measurements when it's not even clear why the device would give you such measurements in the first place. I think this could have been circumvented by at least spending more time talking about the details in order to operationally convey using a galvanometer as an ammeter or voltmeter, or by deferring the discussion to when the galvanometer's operating principles are better described with the help of magnetism.

Nevertheless, this short discussion then led to a discussion about RC circuits, which would last for most of the remaining lecture time. Overall, the discussion on RC circuits was very fast paced and, as a result, difficult to follow and a bit disorganized. For instance, although some effort was initially made to describe the usefulness of such circuits, it was really only done in passing. Abruptly, the focus was shifted to showing the charging RC series circuit on the slide and jumping to the solution without a proper transition to actually qualitatively describe the circuit and work out the solution systematically before showing it. In fact, a crucial aspect of this circuit, the time constant, was just mentioned in passing, without actually showing from where

that constant comes, or, for that matter, why the units even work out to be that of time. After showing the slides and trying to develop the RC circuit content, seemingly as an after-thought, Prof. Roberts decided to derive how the solution arises from using Kirchhoff's Loop Rule. Even then, there wasn't too much done to describe voltage drops and gains in applying the loop rule to the series circuit itself. Indeed, there are a lot of subtleties to discuss to make sure that the equation makes sense (e.g., why one can use the time-dependence of the capacitor's charge build-up as a direct means of writing down the current, or why the current should be seen to reduce over time as more charge builds up on the capacitor). Indeed, bypassing a preliminary discussion on the qualitative features of the circuit really detracted from the overall presentation of the circuit, particularly given that this foray into RC circuits is the first theoretical instance in which the students are exposed to a circuit that has a clear, quantifiable time-dependence. Again, it's not to say that the derivation was done incorrectly on the whiteboard, but that there could have been more to motivate the circuit itself. Understandably there was a limited time to present the content based on Prof. Roberts' schedule for that day, but there's absolutely no reason why that discussion couldn't have been drawn out to continue in the next class. In fact, that could have made things better, given that the students would have gotten some time to absorb preliminary aspects of the content prior to being introduced to it again in the next session.

While the seemingly unplanned derivation was taking place (again, I say that because to me it seemed like an after-thought, based on how it was presented), it was a bit awkward that he wasn't really facing the class while working things out on the board. Obviously, you'd be facing the board while writing things down, but even when nothing was being written down, he was mostly talking to the board, instead of taking time to glance at the students to read their overall body language regarding the topic. Seeing the students' body language at that point would have been instructive, as it was clear to me that the subset of students who were paying attention seemed to be quite unsure of what was transpiring.

Moreover, in doing the separation of variables procedure to solve the differential equation introduced by the loop rule, Prof. Roberts made a comment about how the process was "pretty straightforward," and that the students should have all done something similar in their math classes. Although I understand that making such comments might have the aim to make the math less daunting, it is almost always the case that such comments have the reverse effect, especially since there isn't necessarily a guarantee that they've seen such techniques in their math classes. Technically, because the two-semester sequence of single-variable calculus is a prerequisite to the course, it's possible that students may have seen some form of solving basic differential equations; however, to my knowledge, I believe they might not have been exposed to this style of first-order differential equation, involving a constant term in the equation. Nevertheless, it's usually better to not make such comments, as it's entirely possible for most students to feel uneasy about it, particularly if they haven't done something like this in their calculus classes (which is entirely possible), or if they just flat-out don't recall it (which is quite probable).

From the relatively abrupt discussion of the charging RC series circuit, there was an even more abrupt discussion of the discharging RC series circuit, where a charged capacitor would end up discharging by allowing the charged plates to neutralize by running a current across a series resistor. Although the loop rule has less terms in this case, it's actually slightly more complicated to make sure the signs of the terms are correct. The main issue arises from writing the current, i, in terms of the time-varying charge on the capacitor, q, such that

$$i = -\frac{dq}{dt},$$

where the inclusion of the negative sign is paramount; otherwise, for example, the result for the charge as a function of time, $q(t)$, would end up being an exponential rise instead of a decay. Again, there was no real effort made to build up the problem from a qualitative point of view, only to then transition into a proper derivation of the time-dependence of the various circuit parameters. Prof. Roberts did some superficial description of the time-dependent graphs of the charge and current within this circuit, but that's about it.

For the sake of emphasis, the entirety of his description of series RC circuits lasted no more than about 20 minutes, and because he moved on to a new topic, it seemed like this was the extent of what was going to be presented to the class about these important circuits. Personally, a proper description of RC circuits can easily take at least one hour, and easily more than that.

As indicated above, Prof. Roberts then abruptly transitioned to make a quick mention about power distribution systems. Although a nice application, the brevity of the discussion (which only really lasted about three minutes) again detracted from making sense of the topic at hand. As quickly as a few words were stated about these systems, and a comparison between two-prong and three-prong power outlets was described (again, a nice inclusion, but only really meaningful with more time spent to talk about it), Prof.

Roberts immediately transitioned into having the students take the Chapter 25 test, presumably running until the end of the class.

As a final note about the RC circuit discussion, given the extreme pace of the class, it was unclear if more effort would be made in future classes to elaborate further on this topic. For the sake of being transparent, the associated lab on RC circuits would actually not take place until the week of 11/07/22. Although it's not necessarily wrong to present the theory for a lab in advance of actually doing a lab (in fact, some classes, including at SMC, force students to learn the theory in one semester, and then to apply that theory to a lab in the following semester), given that we have the ability to do labs essentially on the fly, it seems like the structure for the labs is not quite in line with the structure for the theory. Especially if the theory is only limited to what was described within 20 minutes of lecture, it seems like the class is structured at too fast a pace, without emphasis being provided where it counts the most.

On Friday, 10/28/22, Prof. Roberts started talking about the importance of using magnetic fields in bubble chambers, which are chambers that particle physicists use to analyze fundamental particles that arise from violent collisions between other fundamental particles. Although it was a good effort to apply the need for magnetic fields as a means of sorting out the occasional soup of particles that come out of the collision's epicenter, there could have been a little more done to actually specify how, for example, a positively charged particle can be distinguished from a negatively charged one, or how two positively charged particles can be distinguished based on the trajectories they make if they have different masses, etc.

After the quick discussion on bubble chambers, Prof. Roberts moved onto another application of magnetic fields: the velocity selector. This is a device that, as the name suggests, selects for very specific velocities of a stream of particles, allowing the emerging beam-line to be more collimated and to have a very uniform distribution of velocities across the beam's cross-section. It was emphasized how such devices are readily used by accelerator physicists, which is a great feature about Prof. Roberts' approach to teaching: namely, making sure that the content's relevance is connected to real-world applications and occurrences.

Nevertheless, it was somewhat disheartening to see that there was no clear, pre-determined effort to talk about the specifics of how the selector works. A slide showing a figure of such a selector was shown and described, but there were no specifics mentioned about how the process actually works, which relies on making sure the crossed electric and magnetic fields end up making the net force of moving particles within that region be balanced. It was only when a student of his asked a question about forces being balanced that Prof. Roberts actually got swayed into finally doing some justice to the topic. Again, my worry was that if the student had not poignantly inquired about this, the discussion would have been completely bypassed, since, at least to me, it seemed like Prof. Roberts was ready to move on from this topic. If this student had not inquired about things, it would have made the discussion of the following topic even more confusing, as Prof. Roberts would end up using the outcome of the velocity selector to describe J. J. Thomson's seminal work in determining the charge-to-mass ratio of the electron at the end of the 19th century. The derivation of the charge-to-mass ratio was done well, and it was clear how the experimental setup would lend itself to determining the charge-to-mass ratio of the constituents of the cathode ray.

Finally, prior to having students begin their chapter test, Prof. Roberts quickly presented the pioneering oil-drop experiment by Robert Millikan that determined the electron's charge. The experimental setup was shown using the projector, but there wasn't much done to talk about the specifics of how Millikan used the quantization of charge to extract out the charge of the electron from some basic statistical analysis of the various force-balanced oil drops. As has been the theme in the various instances described above, there seems to be an overwhelming preference to stick to the schedule and proceed with a fast pace, rather than to take a little more time to make the described topics more pedagogically sound.

All in all, students on this day of lecture again seemed to not be paying much attention even more than last time. There were several students who were clearly looking through notes to cram last-minute information for the looming test, and there were also a couple of students who literally showed up to class right before the passing out of the test, presumably missing the lecture portion to gain some more time to get prepared to take the test. As stated before, it might prove useful to list out the pros and cons of running the class in this way, as having a test on old content immediately follow a lecture on new content (which is also being rushed through) does not necessarily seem like it would achieve the intended goal of properly progressing through course content in an efficient manner.

Lab Observation (Wednesday, 10/26/22)

Prof. Roberts' enthusiasm as a teacher really shined during my observation of a lab that he had set up. This lab had students learn about how to use an oscilloscope, by using it to directly measure a function generator's outputted sinusoidal signal's amplitude and period. When I walked into the classroom, Prof. Roberts had already shown the students how to set up the various devices and associated connections to be able to complete the lab. One suggestion I would have, in terms of making students better able to see the setup, is to make use of the classroom's document camera. Although it's hard to twist around the actual camera to have it view the instructor's workbench, it's still doable, as I've done it many times over. By doing so, all students can see a magnified view of the setup, which is particularly useful in showing the oscilloscope's screen, as well as the read-out and various buttons on the oscilloscope and the function generator. Without the use of the projector, only the students sitting more directly behind the instructor's work bench would really be making the most sense out of the setup and equipment.

In any case, Prof. Roberts was successfully able to show the function generator's signal on the oscilloscope after a little bit of fiddling around, which is totally normal given the age of the devices and the commonality of some of the wires and/or equipment being somewhat dysfunctional.

Then, Prof. Roberts had the relatively full class split up into groups of 3 or 4 in order to set up the lab themselves, as well as to get the necessary measurements in order to complete the lab worksheet, which they would individually turn in at a later date. It was clear that the students felt extremely comfortable asking Prof. Roberts for help, and it was also evident how willing he was to help them in a respectful and joyful manner. It was also nice to see that Prof. Roberts had a good sense of the progress each group was making, as he consciously prioritized helping groups that were falling behind. He was also very capable in troubleshooting each group's difficulties in getting a signal, or properly reading the signal. In fact, there were a couple of groups who had some equipment failure, and he was successfully able to swap out equipment or to generally fix any problems that arose. It was also refreshing how responsive the students were to his requests, as he drew the class's attention to hear him out on a couple of occasions, aiming to troubleshoot a common difficulty that many of the groups were having.

On that note, I think the one main issue I noticed in the execution of this oscilloscope lab was not taking enough time to emphasize how to properly adjust and measure features of the signal on the oscilloscope. The screen of the oscilloscope displays a signal on a coordinate system, with the vertical axis denoting the voltage of the signal, and the horizontal axis denoting the time. Several groups were unsure how to actually measure the amplitude and the period, since it seemed like Prof. Roberts had either not gone over this notion, or not gone over it enough, prior to my arrival to this observation. Indeed, the ruler-based measurement of the grid on the screen of the oscilloscope is essential to properly using it. He did end up addressing this issue both on an individual basis, as well as in one of the instances when he called the class's attention collectively. Nevertheless, I know that with more experience in teaching this lab, Prof. Roberts will surely be able to budget the time in a better way, particularly to ensure that he covers all of the necessary bases before having the students work more independently on the lab. Nevertheless, even with some of these issues, the budgeting of the time, although a bit frantic towards the end, did eventually lead to the class, as a whole, finishing and cleaning up by class's end.

That being said, it was quite humbling to see not only how comfortable students were in seeking help from Prof. Roberts, but also in seeking help from one another. Several students from several groups politely and gleefully went to other groups to ask for help, or to use the successes of other groups to troubleshoot their own issues. In that sense, it was very clear to me that Prof. Roberts has a knack for setting up an environment that is quite conducive to learning, including one that fosters collaboration and friendship.

FACULTY OBSERVATION FORM

Evaluation of: Kevin Roberts Semester: Fall 2022

Department: Physics

Evaluator: Keith Ouellette Position: Associate Professor

Knowledge, Skill and Ability as an Instructional Faculty Member	Satisfactory or Better	Needs Improvement	Unsatisfactory	Not Observed (NO) Not Applicable (NA)
1. Establishes a student-instructor relationship conducive to learning	○	○	○	○
Comments: Knows all of his students' names. Students appear motivated, engaged, and comfortable asking questions and volunteering answers in class. Walks around the classrooom during think-pair-share activities to aid students and check their progress.				
2. Communicates ideas clearly and effectively	●	○	○	○
Comments: Boardwork is very neat, clear and organized. Excellent diagrams describing the motion of a rigid body for all of the possible angular velocity and angular acceleration scenarios.				
3. Stimulates students' interest and desire to learn	●	○	○	○
Comments: Fosters students' curiosity by using physical manipulatives in lessons and by discussing very interesting relevant examples.				
4. Promotes active involvement of students in learning activities	●	○	○	○
Comments: Frequently asks students questions while introducing a topic or presenting or example. Has several think-pair-share activities to give students opportinuities to work on exercises in class on their own and in groups.				
5. Demonstrates sensitivity in working with students from diverse backgrounds and with different needs	●	○	○	○
Comments:				
6. Employs appropriate pedagogy	●	○	○	○
Comments: Provides a balanced mix of introduction, theorems, proofs, examples, and exercises in class discussion.				
7. Begins class promptly and ends at time designated on schedule of classes	●	○	○	○
Comments:				
8. Uses class time efficiently	●	○	○	○
Comments:				

9. Maintains an appropriate pace during class session	●	○	○	○
Comments: Gives students enough time to process ideas, work on examples, and respond to questions.				
10. Provides students with a syllabus which includes a written explanation of the evaluation process, expectations and requirements, assignments, course content, relevant dates, and other information	●	○	○	○
Comments: Deadline for last day to withdraw with a grade of W is incorrectly stated as Friday, May 14. Final Exam date is incorrectly stated as June 11th. Using SMC sample model syllabus template is recommended for accessibility.				
11. Teaches course content that is consistent with the official course outline of record	●	○	○	○
Comments:				
12. Uses materials pertinent to the course content	●	○	○	○
Comments:				
13. Teaches at a level that is appropriate to the course content	●	○	○	○
Comments:				
14. Has appropriate command of the subject matter to be able to respond to students' needs	●	○	○	○
Comments:				
15. Assesses students' progress regularly	●	○	○	○
Comments: Has 14 in-class exams and a final exam.				
Additional comment: Please see attached comments.				

Date(s) of Visit: 11/7/2022

Length of visit: 3 hrs, 5 min Course (if applicable): PHYSICS 21

Conference Date: 11/22/2022

Evaluator's Signature: Keith R. Ouellette

Evaluatee's Signature: Kevin F Robeste

Faculty member's signature does not necessarily imply agreement. It is merely an acknowledgement that the complete report has been read and a copy received.

Peer Evaluation for Kevin Roberts by Keith Ouellette

I visited Prof. Kevin Robert's Physics 21 Mechanics with Lab class in Science room 106 once on Monday, November 7, 2022 from 1:45pm-4:50pm. Class started on time. I counted 18 students. The topics for the day included angular velocity, angular acceleration, kinematic equations for rotational motion, and tangential velocities of points on objects.

Kevin elicited student engagement immediately at the start of class. He began his introduction to the chapter "Rotation of Rigid Bodies" by asking the class a fundamental question "What do we mean by a rigid body?" Kevin teaches through examples. After some students answered the question by explaining rigid bodies in their own words, he exhibited a bicycle wheel as an example and spun it. He also produced an example of a body that changes shape as it rotates-pizza dough. A student then asked "Why don't planets change size as they rotate?" to which Kevin responded, "They actually do." He then proceeded to take Earth as an example and mentioned how its equatorial radius is greater than its polar radius due to its "solidish" crust. I found this unanticipated discussion very effective in peaking the class's interest on the topics of the day.

His teaching style involved introducing a topic, leading the class through some example exercises on that topic, and then giving the students a couple of think-pair-share activities to allow the students the opportunity to work on their own and with their peers.

Prof. Roberts writing on the board was very clear and organized. He boxed important equations when introducing a topic, drew helpful figures and diagrams to start his solutions, showed an adequate amount of detail in his work on the board, and boxed his final answers (which always included the appropriate units). I appreciated how Kevin took the time to remind students while they were computing an angular velocity to make sure their calculators were in radian mode for the entirety of the class.

During the first think-pair-shar exercise, students were given four possible graphs of the angle function with respect to time and were expected to choose the graph that described a particle rotating clockwise for 2 seconds and then reversing direction at half of its original angular speed until it has moved through the same angle. I noticed students working on the problem. Some worked in pairs and some worked by themselves. I was pleased to discover that Kevin knew his students' names when they asked him questions about the problem. One student asked about how one determines from the graph that the particle moves at half of its original speed. Kevin guided the student to the correct answer by checking the slopes of the tangent lines of each graph. Another student asked about how one could find the angular acceleration from the graph. Prof. Roberts correctly suggested to check the concavity of the graph.

Prof. Roberts gave the class a 10-minute break from 2:53pm-3:03pm.

For the next hour and twenty minutes, Prof. Roberts went over the kinematic equations of rotational motion with constant angular acceleration. He listed and enumerated each equation

after its linear analog to show their similarities. Prof. Roberts gave the students three think-pair-share activities which he chose from the textbook and wrote on the board, simplifying the problems by eliminating any extraneous information given.

I have a few suggestions for Prof. Roberts. First, I noticed the course syllabus indicated there would be a lab scheduled during this class that day, but unfortunately there was no lab to observe. On another occasion, I had to postpone my observation due to an exam being moved to that day on his updated schedule. While I understand that it is necessary to sometimes move exams and due dates, one should try to avoid shifting the dates of exams and labs too frequently during a semester, especially if there are many of them. Secondly, I noticed Kevin was taking some time during class to choose exercises from the textbook for think-pair-share activities. One suggestion to improve efficiency is to select these exercises in advance and then distribute them on a handout before class. A student entered the classroom at 3:50pm and sat in the front row without wearing a mask. A classmate gave the student a mask at 4:19pm. It is important to notice these situations and remind students to stay masked indoors per SMC policy. Finally, at one moment during class, I observed one group of students in the back corner trying to engage in excessive casual conversion with the professor during class. I found this small talk distracting as an observer. My final suggestion is for Prof. Roberts to politely remind students to stay focused on the material discussed and not be a distraction to others during class.

Overall, Prof. Roberts is a very affable, knowledgeable, and an energetic instructor. I am looking forward to observing his implementation of these suggestions in future classes.

FACULTY OBSERVATION FORM

Evaluation of: Kevin Robert's Semester: Fall 2022

Department: Physical Science

Evaluator: Lydia Ayala Position: Assistant Athletic Director

Knowledge, Skill and Ability as an Instructional Faculty Member	Satisfactory or Better	Needs Improvement	Unsatisfactory	Not Observed (NO) Not Applicable (NA)
1. Establishes a student-instructor relationship conducive to learning	●	○	○	○
Comments: Prof. Roberts interacted with the students regularly and when students had questions or comments he was open and responsive to their comments				
2. Communicates ideas clearly and effectively	○	●	○	○
Comments: During lecture when explainations were given on the concepts, Prof Roberts did a great job explaining the topic at hand. However, I observed when it came to the practical and equation side of things communication was a confusing. There were several times errors were made and then corrected which made it hard to follow.				
3. Stimulates students' interest and desire to learn	●	○	○	○
Comments: During lecture Prof. Roberts was engaging with students and checked that they understood concepts and asked if any questions were needing clarification. He gave differing examples and even related content with current news which I felt was helpful for students to grasp the concepts at hand.				
4. Promotes active involvement of students in learning activities	●	○	○	○
Comments: During the class, Prof. Roberts tried engaging students, asked if they had questions and tried to engage if they were following. Although most students were not responsive, I felt Prof. Roberts was trying to promote an active involvement of the students				
5. Demonstrates sensitivity in working with students from diverse backgrounds and with different needs	○	○	○	●
Comments:				
6. Employs appropriate pedagogy	●	○	○	○
Comments: During the class students were asked to work together and work on problems in small groups. Prof. Roberts gave the students time to work independently in their groups while he walked around trying to engage with them. He then brought the class back together to discuss and work the problem out as a group				
7. Begins class promptly and ends at time designated on schedule of classes	●	○	○	○
Comments:				
8. Uses class time efficiently	●	○	○	○
Comments:				

9. Maintains an appropriate pace during class session	○	◉	○	○
Comments: My concern was with the explanation and solving of equations. There seem to be a quickness and assumption that the students were knowledgable of conversions and mathematical skills to solve the problem. During my observation Prof. Roberts seemed unsteady or rushed through this part of class.				
10. Provides students with a syllabus which includes a written explanation of the evaluation process, expectations and requirements, assignments, course content, relevant dates, and other information	○	◉	○	○
Comments: There were some inconsistency with the syllabus regarding labs when I looked initially at the documents. Fixing and making sure the students are aware in writting provides a more productive learning enviorment for everyone, especially if they miss a class and miss the verbal updates.				
11. Teaches course content that is consistent with the official course outline of record	◉	○	○	○
Comments: Upon my visit the class was reviewing and going over content that was consistent with the official course outline.				
12. Uses materials pertinent to the course content	◉	○	○	○
Comments:				
13. Teaches at a level that is appropriate to the course content	◉	○	○	○
Comments:				
14. Has appropriate command of the subject matter to be able to respond to students' needs	◉	○	○	○
Comments: Prof. Roberts did a great job of responding to several questions that were related and sometimes not related to the topic at hand. Was very open and explained to the students to provide a detailed explanation to their questions. He also was able to segue into topics that they would be learning in Phys 22.				
15. Assesses students' progress regularly	◉	○	○	○
Comments: Often times checked in on students during class and asked if they understood and had any questions. During group work, walked around and tried to engage with students before bringing the group back together.				

Additional comment:

As a first year tenure review, I believe Prof. Roberts did a good job. It can be very overwhelming and uncomfortable having someone outside your department reviewing and I did pick up on some nerves or uncomfortability with my presence in class. I thought the engagement with students was necessary for a course like Phys 21 and observed some areas of improvement during lecture. Overall, with little compentency of Physics, I was able to understand the general concept of the topic during lecture and attest that Prof. Roberts was able to communciate the concepts effectively to students.

Date(s) of Visit: November 2, 2022

Length of visit: 1hr 45 mins Course (if applicable): Phys 21

Conference Date: November 21, 2022

Evaluator's Signature: LYDIA AYALA (Nov 21, 2022 17:08 PST)

Evaluatee's Signature: Kevin F Roberts

Faculty member's signature does not necessarily imply agreement. It is merely an acknowledgement that the complete report has been read and a copy received.

Signature: Lydia Ayala (Nov 21, 2022 17:07 PST)

Email: ayala_lydia@smc.edu

Classroom Evaluation for Professor Kevin Roberts
Observation By: Lydia Ayala (Administrator- Assistant Athletic Director Athletics)
Observation Date: November 2nd
Course Observed: Phys 21
Time Observed: Approximately 1hr 45 minutes

Based on Professor Kevin Roberts schedule, I chose to attend Phys 21 lecture that started at 1:45pm. There was a bit of confusion reading the syllabus as I anticipated to see the class start earlier. Upon checking with department administrative assistant, I discovered that office hours existed before Phys 21. The class started on time and I was able to attend the class for observation.

Phys 21 was a very small class. It was comprised of about 15 students with all but one student being males. I found this interesting based on the content of the course and continued to observe the students as they walked in. There were about 2 students that showed up extremely late to class and I thought it was odd that they just walked in and sat down for class over 30 minutes late. There seemed to be strict attendance polices outlined on the syllabus so this may be something that needs to be addressed by the professor. In addition, when the students arrived late there was nothing addressed by the professor at the time nor during the time I was in observance of the class.

Lecture began promptly as we arrive to class. I thought the topic and subject matter was explained and discussed in a very linear and easy manner to students. Professor Roberts was explaining the topic, included some diagrams on the white board and continue to refer to his drawings and diagrams during the lecture portion of the class. He did take opportunities to try to engage the class and often stopped himself and asked if the class had any questions. The class was very somber and quiet throughout the lecture portion of the class. There were several students who were seated in the back of the class that had their computers on but seemed to be doing other things while Prof. Roberts was teaching. A small group of males took front seats and engaged with one another on several occasions while Prof. Roberts was lecturing and it was distracting to me as the observer. I watched the dynamic and Prof. Roberts did not seem to notice or address the young men.

As we segued into the formulas of the lecture portion of the class, I found that Prof. Roberts sped up his explanation and as an observer it felt that there was a notation that students already should know the complexity of the problem. Prof. Roberts stumbled on the problem and had to clarify a few times as I felt the speed in which he was progressing caused the issues. As a observer, I did become a confused so I'm sure the students could possibly feel the same way, although none of the students asked questions or engaged while Prof. Roberts was detailing the problem on the whiteboard. I often felt disengaged with the lecture because of the time Prof. Roberts spent with his back turned on the class. A large majority of the time Prof. Roberts back was turned to the class. This was something manageable perhaps because the size of the class was very small.

Overall, I thought Prof. Roberts did a great job with the students when they did have questions. Several students had questions and Prof. Roberts did a great job explaining and showing them how different scenarios could impact the topic at hand. Prof. Roberts then took the liberty to go slightly off topic to explain a little more complex idea and told the students that this is what they would be introduced to in Phys 22, which I thought was a good way to keep the students engaged and entice them to continue in their educational journey. I can only imagine that being evaluated as a first year tenure professor can be nerve racking and I did notice that Prof. Roberts seemed nervous with me being in attendance. Although I noticed some nerves, I can attest that this would be normal in any situation and do not hold any adverse opinions about this.

Suggestions for Professor Roberts

1. Classroom management of students who are showing up late is important and should be addressed in a manner that is similar to your syllabus. It does very little for those students who are on time and paying attention to lecture to be interrupted during class.
2. Management of those students who may be disruptive or talking during lecture. Simply addressing and maintaining control and attention during long lectures. Perhaps breaking up long lectures with a quick 5 minute stretch, making the students stand up, doing a interactive class break can revive and keep students focused during a long lecture class.
3. Working on controlling speed of explanations when it comes to the mathematical side of the course. Ensuring that you are engaging the students more to find the answers and also guiding them in working the problem out.
4. Utilize the long lecture time to try to engage more with students. During my observation, you spent a lot of time with your back towards the students. Find new and creative ways to discuss and interact with them face to face. Perhaps, utilizing the smart class room more effectively or preparing long notes on the whiteboard ahead of time could be beneficial for everyone involved.

Evaluation Conference Notes (Will be included after our conference conversation)

Professor Roberts and I met Monday, November 21, at 6pm. Our meeting lasted about 45 minutes. We had a great dialogue and discussion about the evaluation. I outlined areas of improvement and Kevin was more than receptive to hear from me and take my suggestions. Professor Roberts agreed with some of my observations and it was refreshing to know that he was already making adjustments for the areas I pointed out. Professor Roberts had already re-worked and edited his syllabus and made things more clear for students. Today he held a review session for the students which helped him with being engaged with his students. I gave some simple suggestions to Robert about time management of his class and also how to interact and check in with the students. I also gave some fun suggestions to break up long class

lectures and ways that Kevin can interact with students in a fun, relaxed way. I also encouraged Kevin that he was doing a fantastic job as a first year tenured professor.

Professor Roberts was very receptive to suggestions and opened up more about a few struggles he was facing as a professor. It was a positive conversation and I encouraged Kevin to engage and share more of his experience with the students. I feel this will make Kevin not only relatable to the students but it will help to engage and immerse them further into the topics at hand. At the conclusion of our conversation, I informed Kevin that the evaluation was sent electronically for signature via Adobe Sign. We were able to both sign the evaluation electronically and ended our meeting. I will highly recommend Professor Roberts to our athletic program. It has been a real pleasure to serve on Kevin's committee and I wish him the best in the future.

Evaluation Conference for Kevin Roberts
December 13, 2022

Evaluators: Lydia Ayala, Sehat Nauli, Emin Menachekanian, Keith Ouellette

Notes: During the evaluation for Kevin Roberts, the committee discussed several recommendations and commendations.

Recommendations discussed include:

- **Kevin needs to better organize and synchronize his syllabus to actual class activities**. It's noted by all evaluators that the schedule listed on the paper syllabus is different from the Canvas syllabus which is different from the actual class activities. If it's confusing to the evaluators, it will also be confusing to students.
- **Kevin should spend more time preparing and thinking through class activities, both in lecture and lab**. It's noted by two evaluators that some class time was taken to set up devices and to choose think-pair-share problems. Another evaluator points out that a mathematical derivation appears to be an afterthought. If the class activities are planned ahead of time, then the class can be run more efficiently and purposefully, with each problem or activity focused on a specific outcome. A loose structure based on an introduction, body, and conclusion for each class can help to organize what needs to be done during each class meeting.
- **Portions of lecture need to be broken down**. It's noted in two evaluations that lecture went on for a long period of time without much interaction between students and instructor. A structure where the instructor teaches for about 15 minutes then give students time to work on the concept in groups or individually will be more effective. This will require planning class sessions in advance as noted above.
- **Lecture pace could be slower, especially for parts involving complex mathematical derivation**. Three evaluators described the pace as being too fast. It seems that there are inconsistencies in pacing, with test day lecturing having a faster pace than non-test days. This issue could also be resolved by planning each class meeting in advance.
- **Improve classroom management**. Several evaluators commented on conversations among students which disturbed those who were within earshot of the noise. Kevin needs to be more cognizant of these disruptions and find a way to manage them.
- **Student attendance for fully-on-ground class needs to be accounted for and a clear attendance requirement should be stated in the syllabus**. Each student is required to complete a specific number of instructional hours, which for on-ground classes usually refers to time spent in the classroom. If there is flexibility in attendance, there has to be a clear way of accounting how students interact with the material. Kevin should also find ways to make students arrive on time, either by a check-in quiz or other low-stakes assessment methods.
- **Kevin needs to submit his self-evaluation on time**. The deadline was December 9, but it was not submitted until the morning of the committee meeting, December 13.

Commendations discussed include:

- **Kevin uses demonstrations to illustrate physics concepts and to start content discussions with students.**
- **Kevin encourages student-student interaction through think-pair-share and other activities.**
- **Students feel very comfortable with Kevin**. His effort to make himself accessible and his classroom a pleasant learning environment are evident. He knows his students' names and provides genuine support in the classroom. He is particularly adept at making lab an enjoyable activity and his enthusiasm for the material is abundantly clear during lab.
- **Kevin incorporated a hyflex approach to his class, using both Zoom and on-ground meeting in the classroom.** The College is testing this approach in other non-laboratory science classrooms. Kevin's experience could provide valuable insights into how the hyflex structure could be incorporated into Physics classrooms.
- **Kevin thinks quickly and is able to handle spontaneous student questions.** He's able to use these questions to relate to other topics that keep students interested in physics.
- **Kevin is eager to making changes once he received the feedback from committee members.**

Santa Monica College

Course Outline for
PHYSICS 21, Mechanics with Lab

Course Title: Mechanics with Lab Units: 5.00

Total Instructional Hours (usually 18 per unit):	144.00
Hours per week (full semester equivalent) in Lecture:	3.50
In-Class Lab:	4.50
Arranged:	0.00
Outside-of-Class Hours	180.00

Date Submitted:	March 2022
Date Updated:	June 2022
C-ID:	PHYS 205
Transferability:	Transfers to CSU Transfers to UC

IGETC Area:

IGETC Area 5: Physical and Biological Sciences (mark all that apply)
- 5A: Physical Science
- 5C: Physical or Biological Science LABORATORY

CSU GE Area:

CSU GE Area B: Scientific Inquiry and Quantitative Reasoning (mark all that apply)
- B1 - Physical Science
- B3 - Laboratory Sciences

SMC GE Area:

GENERAL EDUCATION PATTERN (SMC GE)
- Area I: Natural Science

Degree Applicability:	Credit - Degree Applicable
Prerequisite(s):	MATH 7
Pre/Corequisite(s):	None
Corequisite(s):	None
Skills Advisory(s):	None

I. Catalog Description

This course is a calculus-based study of the mechanics of rigid bodies, emphasizing Newton's laws and its applications. This course includes an introduction to fluids. It is

designed for engineering, physical science, and computer science majors.

II. Examples of Appropriate Text or Other Required Reading: (include all publication dates; for transferable courses at least one text should have been published within the last seven years)

1. University Physics with Modern Physics, 14th , Young & Freedman, Pearson © 2015, ISBN: 9780321973610;
2. Physics for Scientists and Engineers, 10th, Serway & Jewett, Cengage Learning © 2018, ISBN: 9781337553278;
3. Fundamentals of Physics, 11th, Halliday, Resnick, Walker, Wiley © 2018, ISBN: 9781119286240;
4. Santa Monica College Physics Faculty . Online Laboratory Manual for Physics 21, Santa Monica College
5. Mastering Physics, computer-based homework management and tutoring program to accompany text.
6. Heuvelen, Alessandris, Braun, Wozny. Study Guide with ActivPhysics 1, Volume 1.
7. Student Solution Manual to accompany textbook.

III. Course Objectives

Upon completion of this course, the student will be able to:

1. Use the basic concepts in physics to qualitatively explain physical phenomena.
2. Compile data from a physical problem and synthesize these data into a mathematical problem.
3. Take the mathematical problem to a successful conclusion using mathematical principles of algebra, trigonometry, and calculus.
4. Operate, adjust, and use the equipment necessary in laboratory experiments to obtain quantitative measurements.
5. Estimate the uncertainty of a measurement and calculate the uncertainty in the results obtained from such measurements.
6. Use the mathematical tools of the computer, such as spreadsheets and graphing programs, to analyze data.
7. Write laboratory reports including statement of purpose, compilation of data, theory involved in the experiment, method of measurements, samples of calculations, tabulation of results, and analyses of sources of error.
8. Continue their science education by having the skills to succeed in more advanced physics courses.

IV. Methods of Presentation:

Other (Specify), Lab, Lecture and Discussion, Experiments, Group Work, Observation and Demonstration

Other Methods: The methods of presentation used in this class reflect the importance of both a conceptual understanding of physics as well as the analytical mastery of the subject. Lecture and class-demonstrations, including computer simulations and videos, are used to introduce topics to students and to ground those ideas in reality. Most experimental work not only reinforces core concepts but teaches experimental measurement techniques and

the errors associated with them. Physics Education Research (PER) has shown that active-engagement instructional strategies greatly improve student learning. As a result, collaborative learning activities are used in lecture and lab as part of the methods of presentation.

V. Course Content

% of Course	Topic
20.000%	Kinematics: Introduction & Vectors, Motion in 1 and 2 Dimensions
25.000%	Dynamics: Force, Motion and Newton's Laws, Circular Motion, Gravitation
25.000%	Conservation Principles: Work, Energy, Power, Conservation of Energy, System of Particles, Conservation of Momentum
25.000%	Rotations and Oscillations: Rotational Dynamics, Angular Momentum, Static Equilibrium, Simple Harmonic Motion
5.000%	Introduction to Fluids
100.000%	Total

Vb. Lab Content:

% of course	Topic
8.00%	Measurement and Errors
7.00%	Addition of Vectors
8.00%	Graph Matching and Motion
8.00%	Projectile Motion

8.00%	Circular Motion
8.00%	Newton's Second Law
8.00%	Non-conservative Forces
8.00%	Energy
8.00%	Ballistic Pendulum
8.00%	Rotational Inertia
7.00%	Rigid Equilibrium
7.00%	Physical Pendulum
7.00%	Problem Solving Activities
100.00%	Total

VI. Methods of Evaluation: (Actual point distribution will vary from instructor to instructor but approximate values are shown.)

Percentage	Evaluation Method
55 %	Exams/Tests - 3 or 4 Unit Exams
25 %	Final exam
15 %	Lab Reports - 8 to 12 Laboratory Activities
5 %	Written assignments - Problem Homework Assignments
100 %	Total

VII. Sample Assignments:

See attached files:

See attached files:

VIII. Student Learning Outcomes

1. When presented with a physical situation and asked to solve a particular problem in mechanics (i.e. two masses connected via a string passing over a pulley), the student will follow a logical process based on well-established physics principles (i. e. Newton's laws) and demonstrate ability to use basic mathematical techniques including calculus.
2. When conducting a laboratory experiment and writing a lab report, the student will demonstrate understanding of the basics of the scientific method by being able to state a clear and testable hypothesis, taking careful measurements, estimating uncertainties, and drawing appropriate conclusions based on gathered data and on sound scientific principles.

Generated on: 9/15/2022 9:47:51 AM

Santa Monica College

Course Outline for
PHYSICS 22, Electricity and Magnetism with Lab

Course Title: Electricity and Magnetism with Lab Units: 5.00

Total Instructional Hours (usually 18 per unit):	126.00
Hours per week (full semester equivalent) in Lecture:	4.00
In-Class Lab:	3.00
Arranged:	0.00
Outside-of-Class Hours	144.00

Date Submitted:	March 2022
Date Updated:	June 2022
C-ID:	PHYS 210
Transferability:	Transfers to CSU Transfers to UC

IGETC Area:

IGETC Area 5: Physical and Biological Sciences (mark all that apply)

- 5A: Physical Science
- 5C: Physical or Biological Science LABORATORY

CSU GE Area:

CSU GE Area B: Scientific Inquiry and Quantitative Reasoning (mark all that apply)

- B1 - Physical Science
- B3 - Laboratory Sciences

SMC GE Area:

GENERAL EDUCATION PATTERN (SMC GE)

- Area I: Natural Science

Degree Applicability:	Credit - Degree Applicable
Prerequisite(s):	PHYSCS 21 and MATH 8
Pre/Corequisite(s):	None
Corequisite(s):	None
Skills Advisory(s):	None

I. Catalog Description

This course is a calculus-based study of electromagnetism covering aspects of electric and magnetic fields, DC and AC circuits, electromagnetic interactions, light, and relativity. The course is intended for engineering and physical science students.

II. Examples of Appropriate Text or Other Required Reading: (include all publication dates; for transferable courses at least one text should have been published within the last seven years)

1. University Physics with Modern Physics, 15th , H.Young & R. Freedman, Pearson © 2019, ISBN: 978-0135159552;
2. Physics for Scientists and Engineers, 10th, R. Serway & J. Jewett, Cengage Learning © 2018, ISBN: 978-1337553278;
3. Fundamentals of Physics, 11th, D. Halliday, R. Resnick, J. Walker, Wiley © 2018, ISBN: 978-1119286240;
4. H. Young & R. Freedman. Student Study Guide and Solutions Manual for University Physics Volume 1 (Chs 1-20), Pearson , 08-11-2011
5. H. Young & R. Freedman. Student Study Guide and Solutions Manual for University Physics Volume 2 (Chs 21-37), Pearson
6. D. Halliday, R. Resnick, J. Walker. Student Solutions Manual for Fundamentals of Physics (11th edition), Wiley
7. Santa Monica College Physics Faculty . Online Laboratory Manual for Physics 22, Santa Monica College
8. Mastering Physics . Pearson, 15th ed.
   Computer-based homework and tutorial software to accompany H. Young's and R. Freedman's University Physics.
9. WileyPLUS. Wiley, 11th ed.
   Computer-based homework and tutorial software to accompany D. Halliday, J. Resnick, and J. Walker's Fundamentals of Physics.
10. WebAssign. Cengage, 10th ed.
    Computer-based homework and tutorial software to accompany R. Serway and J. Jewett's Physics for Scientists and Engineers.

III. Course Objectives

Upon completion of this course, the student will be able to:

1. Use basic concepts in physics to construct a qualitative explanation of physical phenomena.
2. Use physical principles and laws to construct a quantitative explanation of physical phenomena through mathematical analysis.
3. Utilize various mathematical methods such as algebra, trigonometry and calculus, to navigate through the quantitative analysis of a physical problem.
4. Proficiently operate and adjust laboratory equipment to obtain quantitative measurements in a physics experiment.
5. Estimate the uncertainty of a measurement and the propagation of error for results dependent upon the measurement.
6. Use various computational tools such as spreadsheets and graphing programs to analyze data.
7. Compose organized and thorough analyses of work done in the laboratory.

IV. Methods of Presentation:

Lab, Lecture and Discussion, Observation and Demonstration, Other (Specify), Experiments, Group Work
Other Methods: The methods of presentation used in this class reflect the importance of both a conceptual understanding of physics as well as the analytical mastery of the subject. Lecture and class-demonstrations, including computer simulations and videos, are used to introduce topics to students and to ground those ideas in reality. Most experimental work not only reinforces core concepts but teaches experimental measurement techniques and the errors associated with them. Education research has shown that active-engagement instructional strategies greatly improve student learning. As a result, collaborative learning activities are used in lecture and lab as part of the methods of presentation.

V. Course Content

% of Course	Topic
25.000%	Electrostatics: Charge, Force, and Coulomb's Law Electric Field and Gauss' Law Electric Potential and Energy
25.000%	Electrodynamics: Capacitance and Dielectrics Current, Resistance, and Electromotive Force DC Circuits and Instruments
20.000%	Magnetism: Magnetic Field, Force, and Torque Ampere's Law
25.000%	Electromagnetism: Electromagnetic Induction and Faraday's Law Inductance and Magnetic Materials AC Circuits Maxwell's Equations and E-M Waves
5.000%	Introduction to Special Relativity
100.000%	Total

Vb. Lab Content:

% of course	Topic
10.00%	Charge and Field
10.00%	Flux
10.00%	Equipotential Surfaces
10.00%	Oscilloscope

10.00%	Current and Resistance
10.00%	RC circuit
10.00%	Electron charge to mass ratio
10.00%	RL circuit
10.00%	RLC circuit
10.00%	AC circuits
100.00%	Total

VI. Methods of Evaluation: (Actual point distribution will vary from instructor to instructor but approximate values are shown.)

Percentage	Evaluation Method
55 %	Exams/Tests - Unit Exams 55%
25 %	Final exam
5 %	Homework
15 %	Lab Reports - Laboratory 15%
100 %	Total

VII. Sample Assignments:

Sample Problem from a Typical Homework Assignment:

A coaxial cable consists of a solid inner conductor of radius a and a hollow outer conductor of inner radius b and outer radius c. The two carry equal but opposite currents, I, uniformly distributed over their cross-sectional areas.

a) Determine an expression for the magnetic-field strength, B, as a function of the radial position, r, at all distinct spatial locations.

b) Sketch a graph of the magnetic-field strength, B, as a function of the radial position, r.

c) Repeat part (a) when the outer conductor carries twice the current of the inner

conductor.

Sample Laboratory Assignment:

Complete a scientific report, or inquiry-based worksheet, of the measurement of the charge-to-mass ratio of the electron. Within such a report or worksheet, a student would be required to make detailed comparisons between results that follow from basic principles and actual observations. A careful tally of experimental uncertainties within the lab and the associated propagation of errors must be exhibited to determine whether the stated observations are consistent with the theory used to model the process. In the event the results are not consistent within experimental uncertainties, various aspects should be cited that could have led to the disparity between predicted and observed results. [Please refer to the attached file that showcases a more traditional assignment of such a laboratory exercise on the determination of the charge-to-mass ratio of the electron.]

VIII. Student Learning Outcomes

1. When presented with a physical situation and asked to solve a particular problem in, for example, electricity and magnetism (e.g., the creation of an electric current by a changing magnetic field), the student will follow a logical process based on well-established physics principles (e.g., Maxwell's equations) and demonstrate ability to use basic mathematical techniques, including calculus.
2. When conducting a laboratory experiment and writing a lab report, the student will demonstrate understanding of the basics of the scientific method by being able to state a clear and testable hypothesis, taking careful measurements, estimating uncertainties, and drawing appropriate conclusions based on gathered data and on sound scientific principles.

Generated on: 9/15/2022 9:48:30 AM

PHYSICS 21, MECHANICS WITH LAB

FALL 2022

COURSE INFORMATION

Course Title:	PHYSICS 21, MECHANICS WITH LAB
Section Number:	3006
Units:	5.00 units
Prerequisite(s) or Advisories:	Mathematics 7 with a minimum grade of C or equivalent, trigonometry will be reviewed, but familiarity will be assumed
Day and Time:	Monday, Wednesday 01:45–04:50 PM
Location:	SCI 106
Day and Time:	Friday 01:15–03:15 PM
Location:	SCI 106

INSTRUCTOR INFORMATION

Instructor:	Kevin Roberts
Email Address:	Roberts_kevin31@smc.edu
Office Hours:	Monday 12:20–1:20 PM, Wednesday 12:20–1:20, Friday 3:20–4:20 in SCI 275 Tuesday 12:00–1:00 PM on Zoom (Meeting ID: 809 988 3587, Password: SMCPhys)

I welcome you to contact me outside of class and student hours. You may email me, message me on Canvas or tag me on the class Discord. You may also make office hours by appointment.

COURSE DESCRIPTION

This course is a calculus-based study of the mechanics of rigid bodies, emphasizing Newton's laws and its applications. This course includes an introduction to fluids. It is designed for engineering, physical science, and computer science majors.

COURSE OBJECTIVES

Upon completion of this course, the student will be able to:

1. Use the basic concepts in physics to qualitatively explain physical phenomena.
2. Compile data from a physical problem and synthesize these data into a mathematical problem.
3. Take the mathematical problem to a successful conclusion using mathematical principles of algebra, trigonometry, and calculus.
4. Operate, adjust, and use the equipment necessary in laboratory experiments to obtain quantitative measurements.
5. Estimate the uncertainty of a measurement and calculate the uncertainty in the results obtained from such measurements.
6. Use the mathematical tools of the computer, such as spreadsheets and graphing programs, to analyze data.
7. Write laboratory reports including statement of purpose, compilation of data, theory involved in the experiment, method of measurements, samples of calculations, tabulation of results, and analyses of sources of error.
8. Continue their science education by having the skills to succeed in more advanced physics courses.

STUDENT & INSTITUTIONAL LEARNING OUTCOMES

1. When presented with a physical situation and asked to solve a particular problem in mechanics (e.g., two masses connected via a string passing over a pulley), the student will follow a logical process based on well-established physics principles (i.e., Newton's laws) and demonstrate ability to use basic mathematical techniques including calculus.
2. When conducting a laboratory experiment and writing a lab report, the student will demonstrate understanding of the basics of the scientific method by being able to state a clear and testable hypothesis, taking careful measurements, estimating uncertainties, and drawing appropriate conclusions based on gathered data and on sound scientific principles.

REQUIRED TEXTS, MATERIALS, & SUPPLIES

1. Young, Freedman, and Ford, University Physics with Modern Physics. 15th ed. WITH MASTERING PHYSICS REQUIRED
   You can get either the digital or hard cover versions if you have an unused Mastering code. We will be using it for online homework.
2. Scientific or graphing calculator. You may use Desmos or Wolfram Alpha.
3. Computer and Internet access.
4. Installed desktop Microsoft office. (Free via SMC)
5. Notebook and writing implement(s) (digital tablets are an acceptable option)

RECOMMENDED RESOURCES & SKILLS

Supplementary Texts

1. Adelson, Get ready for physics
2. McMullen, Essential Calculus-based Physics Study Guide Workbook, Volume 1

Computer Skills

To succeed in this course, you should have the ability to:

- Navigate the Internet using a web browser.
- Manage files using either the Mac or Windows operating systems.
- Send and receive email messages and attachments.
- Use a word processing program like Microsoft Word or its equivalent.
- Navigating Canvas: checking assignment deadlines, uploading work, and checking grades. Every assignment and exam will be hosted here. Check frequently for any updates to assignments.
- Use a spreadsheet program like Microsoft Excel or its equivalent for data analysis for labs.

METHODS OF PRESENTATION

- Lab, Lecture and Discussion, Experiments, Group Work, Observation and Demonstration
- Other Methods: The methods of presentation used in this class reflect the importance of both a conceptual understanding of physics as well as the analytical mastery of the subject. Lecture and class-demonstrations, including computer simulations and videos, are used to introduce topics to students and to ground those ideas. Most experimental work not only reinforces core concepts but teaches experimental measurement techniques and the errors associated with them. Physics Education Research (PER) has shown that active engagement instructional strategies greatly improve student learning. As a result, collaborative learning activities are used in lecture and lab as part of the methods of presentation.

METHODS OF EVALUATION

- Chapter Tests: Chapter tests (14 @50 pts each) are mandatory and must be taken when scheduled. Chapter tests will consist of multiple-choice questions, short answer problems, and a free-response problem that you fully work out, chosen from 3. I will provide all physical constants that you will need, and you will make a **hand-written** formula sheet on a single

8.5-by-11-inch sheet of paper (both sides). Tests are **not** cumulative, but concepts build throughout the course. There will be a total of 14 tests, one for each chapter covered (each worth 4.3% of your grade). I will drop the two lowest-scoring tests.

- Final Exam: This is an optional cumulative exam that can potentially raise your grade. It will be worth the same point count as the same weight as 3 tests. If you well on the exam, I will include it in your final grade. If you do worse, it does not hurt you in any way.
- Lab: Labs will be held each Wednesday unless otherwise noted. The labs that we do will be posted onto Canvas. You are expected to read the week's lab ahead of time, so you can understand before we begin the lab. The experiments can be finished more quickly if you come prepared. Lab reports will be due one week following the lab session, unless otherwise noted. During lab days, we will be breaking up into groups of 3. You will receive a 0 for any missed lab. I will drop your lowest lab score.
- Homework: You will be assigned between 20-30 problems per chapter that you need to finish before a test. We will be using online homework via Pearson's Mastering Physics. You will be able to make unlimited attempts for each question without penalty. For full credit, you will also submit a scanned written hard copy (or answers written by hand on a digital tablet) to Canvas. Full reasoning for EACH question is required for full credit. Anticipate that you will require 6-10 hours to complete the homework each week.
- Pre-lecture Quizzes: Quizzes will be assigned to Mastering. Each quiz will be short and will cover the material that will be covered in lecture that day. Each will be due before class. You can make unlimited attempts at each pre-lecture quiz.
- A grade of "Incomplete" may be granted at the very end of the term if an unforeseen event or illness prevents you from completing the final coursework and at the time you have earned a "C" or better. "Incomplete" grade situations are extremely rare, and are entirely at the discretion of the instructor, within the parameters set above.

Your final grade will be calculated using the following percentages:

Percentage of Grade:	**Evaluation Method:**
60%	Chapter Tests
8%	Pre-lecture Quizzes
16%	Lab Reports
16%	Homework

GRADING SCALE

A = 90.0-100%
B = 80.0-89.9%
C = 65.0-79.9%
D = 55.0-64.9%
F = 54.9% and below

ATTENDANCE, DROPS, & WITHDRAWALS

You are responsible for maintaining your own enrollment status. You may drop the course with a withdrawal through the twelfth week in a regular semester. It is NOT possible to drop the class after the twelfth week of the semester. You should check your Corsair Connect for specific drop dates for each of your courses. General information regarding drop dates, withdrawals, refunds, and other enrollment matters may also be found at the Admissions section of the SMC website. See Admissions Dates and Deadlines for the complete semester schedule including short term courses.

- Attendance is crucial to your success. The class may cover material that is not discussed or found elsewhere, so you will miss out on an essential part of the learning process if absent. Regular attendance is required of every student. You should attend every class, but extenuating circumstances arise that can make this difficult. If you cannot attend a class, please let me know. If circumstances make you miss more than 3 classes during the semester, you may be overextended. I ask that you come see me to discuss your options. Missing 5 class sessions in a row MAY lead you to be dropped from the course by the instructor.

- Sunday, September 11 is the last day to withdraw with no grade showing on your permanent record and a refund. Saturday, November 19 is the last day to withdraw from this class with a grade of W.
- The date of the final is Friday December 16th 12–3 PM. The final exam is optional and comprehensive and is the weight as three other tests. Let me know if you have a conflict with your other final exams.

MISSED AND LATE WORK

- Late work is accepted up until the final day of the semester, but there is a deduction equal to 20% of the assignment. In addition to wanting to avoid the grade penalty, you should make every effort to submit all work by its deadline so you can receive the prompt feedback and grade that are an essential part of the learning process and success in college.
- When absent, you are still responsible for completing and submitting all work on time; however, if you have a documented extenuating circumstance that prevents the timely submission of work, please speak to the instructor as soon as possible to receive an accommodation with a new reasonable deadline.
- Tests are mandatory and must be taken when scheduled. Under compelling circumstances with documentation, they can be made up.

EXTRA CREDIT

You may choose ONE of the following extra credit options. The points will be added to the exam section of your grade.

- You may attend a Distinguished Scientist Lecture and write a two-page analytical reflection paper connecting what you learn at the event to your class materials for up to 10 extra credit points.
- You may participate in the Sustainable Works program for up to 10 extra credit points. For more information visit the Sustainable Works site.

CLASSROOM POLICIES

Class Participation

- Learning is a collaborative exercise; this classroom is your space too! Everyone belongs here, no matter your background. I highly encourage you to be "wrong" here; it is how we learn! If you already knew everything, you wouldn't need me! Sometimes, active participation can feel uncomfortable, particularly if you are unsure of the "answers." One of the themes of this course, as I teach it, is that science (really all knowledge) is a process more than a set of facts. Like a learning a musical instrument, practicing helps us to become better scientists!
- All of us in the class, you, me, your peers, have a responsibility to create an environment in which we can all learn from each other. I expect everyone to participate in class so that we can all benefit from the insights and experiences that each person brings.
- Learning doesn't stop after the class ends; you should all use the course Discord. You should use it to pose homework questions and answer questions of your peers. You can also use it to set up Zoom study groups with each other.

Classroom Environment

- Please ask questions during class
- This classroom is welcoming to all. I expect everyone to be respectful in how they communicate and interact with every person in this class. Racist, sexist, homophobic, and other forms of language that potentially marginalize or demean any student are not tolerated.
- In this class we will be sharing multiple perspectives. Please remember to be respectful with one another.
- You are expected to follow all Codes of Conduct as established by Santa Monica College. These documents can be reviewed at the Student Judicial Affairs webpage. See the rules for Student Conduct (AR 4410), Code of Academic Conduct (AR 4411), Student Honor Code (AR 4412).

Electronic Devices

- Use of electronic devices such as laptops, smartphones, and tablets are permitted in this class. However, to maximize participation and learning, you should limit this usage to activities supporting concurrent class topics.

- Cell phones and other electronic devices should on silent during class time. I recommend putting all electronics on "do not disturb" mode during class to keep you focused.

Food & Drink

Food or drink is prohibited in the classroom except for water bottles, which are permitted if they remain closed when not in active use and are kept away from all equipment.

Recording of Class Lectures

In accordance with Section 78907 of the California Education Code, students shall not use any electronic listening or recording device in any classroom without the prior consent of the instructor, except as necessary to provide reasonable auxiliary aids and academic adjustments to disabled students.

Homework and Lab Reports

- We will be using online homework via Pearson's Mastering Physics. You will be able to make unlimited attempts for each question with no penalty.
- While you are completing the homework, you should write out your reasoning: for simple conceptual questions, a couple of sentences; for longer problems full reasoning, see below.
- The homework in this class can be rather challenging. Anticipate that you will require 6-10 hours to complete the homework each week. You will likely need assistance with at least two or three problems per assignment.
- To ensure that you have enough time available to seek assistance, begin working on the problem sets as soon as possible.
- I encourage you to work with other students to complete homework problems and lab reports. I do expect that each student turn in their own individual work. You are required to turn in a copy of your own handwritten work onto Canvas.
- If you are unable to do a problem, you may post online for other students help, email me to ask for help (see contact information above), or go to office hours. There are also FREE tutors offer via SMC, (https://www.smc.edu/student-support/academic-support/tutoring-centers/index.php) and see below.
- Learning doesn't stop after the class ends; you should all use the course Discord. You should use it to pose homework questions and answer questions of your peers. You can also use it to set up Zoom study groups with each other.

Rules For Homework

I want to you to treat each homework problems with the same level of care as you would on an exam. I give a general outline of the rules you should use for your homework assignments. For each type of problem, I will create a guide on how to set-up and solve that problem.

1. General Appearance of Assignment
   a. Handwriting should be neat, legible, and reasonably dark. If the image contrast is not high enough, you will need to re-upload your document.
   b. Problems must be written in exactly the order assigned. That is, problem 1 should be solved first, then problem 2, etc.
   c. You **must** submit your handwritten work to the "assignment" on Canvas for credit.
   d. For each assignment please only create **ONE** pdf with your favorite scanning software or app.

2. **You may write only one equation or statement per line.** After you have written one equation on a line, go to the next line to write the next equation. If you write small and find this wasteful, you may draw a line down the middle of your paper to make two columns, and then begin working down the right side of the paper after you have completely used up the left side.

3. The following steps must be followed when STARTING a homework problem:
   a. Draw a diagram which presents all information given in the statement of the problem. Any symbolic variables (such as x, t, F, etc.) must either appear in the diagram or be listed next to the diagram.
   b. If appropriate, use your diagram to define a coordinate system.

c. If information is given as a numerical value (such as 3.0 m, 12.0 s, 8.0 N, etc.), a symbol (such as *x*, *t*, *F*, etc.) must be assigned to the numerical value. For example, if a problem says that a box has a mass of 3.0 kg, you should write "*m* = 3.0 kg" (if you have more than one use subscripts: m_A, m_B, etc.) on your paper, on or next to the diagram. Do not simply write "3.0kg"; assign a symbol and write "*m* = 3.0kg". Use a single letter for each numerical value.

4. To begin COMPUTATION: Start your solution by stating a well-known equation you have seen either in lecture or in the text (e.g., $F = ma$, $\Delta x = v_{av}\Delta t$, etc.) that is appropriate to the problem at hand. The first equation in a solution should NEVER have numerical values plugged into it; it should be strictly in "variable" form.

5. When FINISHING a problem: If you have an equation in which the variable you are trying to solve for appears, and all other quantities are known, follow the following steps:
   a. WITHOUT PLUGGING IN NUMBERS, isolate the variable. Exceptions: (1) You may always plug in zero. (2) When you have obtained a quadratic equation, you may work out numerical values for the coefficients, and then plug numerical values for the coefficients into the quadratic formula.
   b. Once you have an equation in which the variable is isolated on one side, plug numerical values (if given) into the quantities on the other side of the equation. **When you plug numerical values into an equation, you must include units with the numerical values.** (See item 8, below.)
   c. Compute the numerical value of the quantity of interest.

6. USE THE CORRECT UNITS.
   a. Every numerical answer must include the correct unit.
   b. Any time a number representing a physical quantity appears in a solution, units must be included. Do not insert numbers into an equation without inserting the accompanying units.

Example:	Example:
~~$\Delta x = v\Delta t$~~	$\Delta x = v\Delta t$
~~$\Delta x = (4)(2)$~~	$\Delta x = (4\text{m/s})(2\text{s})$
~~$\Delta x = 8\text{m}$~~	$\Delta x = 8\text{m}$
WRONG	**RIGHT**

   c. Check to make sure that the correct unit for your answer follows from the computation; do not just "tack on" the correct unit at the end of the problem. This generally requires a simple computation. An example follows:

Example: Suppose you wish to compute the acceleration of a 5-kg object subject to a single 10-N force. You would write:

$$a = \frac{F}{m} = \frac{10\ N}{5\ kg} = \frac{10\cancel{kg}\bullet m/s^2}{5\ \cancel{kg}} = 2\text{m/s}^2$$

Notice that expanding "N" into "kg•m/s^2" allows you to cancel the "kg", leaving m/s^2, which is the correct unit for acceleration.

Example of Homework Presentation

The following example illustrates the use of Homework Rules 5-8, of the syllabus.

Problem:
A jogger is running in a straight line from point A to point B, which are separated by 200 m. He maintains a constant speed of 4 m/s. If the jogger is presently 50 m from A (and 150 m from B), and his stopwatch reads 20 s, what will be the reading on his stopwatch when he reaches B?

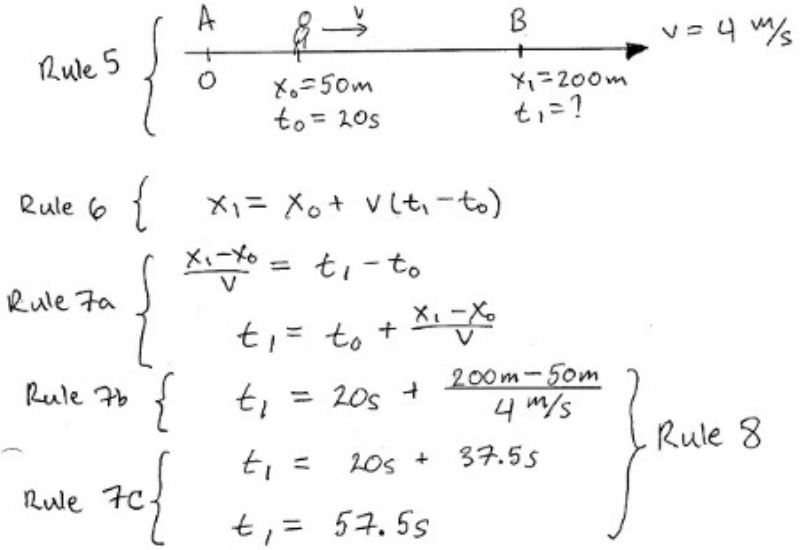

ACADEMIC HONESTY

The SMC Honor statement, signed by each student upon enrollment, reads: "In the pursuit of the high ideals and rigorous standards of academic life, I commit myself to respect and uphold the Santa Monica College Honor Code, Code of Academic Conduct, and Student Conduct Code. I will conduct myself honorably as a responsible member of the SMC community in all endeavors I pursue." Please be extremely careful that you do not engage in any behavior that could even be construed as cheating. Violations could result in failing grades, reports to the Campus Disciplinarian, and subsequent academic disciplinary action. Examples of behaviors that are not permitted include but are not limited to: inappropriate language or physicality in the classroom, and inappropriate behaviors during an exam (talking with another student, looking at or copying from another student's paper, using a disallowed electronic device or calculator, using disallowed notes, leaving the room without prior permission, removing exam materials from the classroom).

ACCOMMODATIONS FOR DISABILITIES

I encourage students requesting disability-related accommodations to contact the Center for Students with Disabilities as soon as possible. I will work with you and the Center for Students with Disabilities to provide appropriate and reasonable accommodations. An early notification of your request for test-taking and/or other accommodations is necessary to ensure that your disability-related needs are addressed appropriately; testing accommodations cannot be applied retroactively.

The Center for Students with Disabilities is located on the first floor of the Student Services Center, and the phone number is (310) 434-4265 or email at dsps@smc.edu Additional Contact Information can be found at the Center for Students with Disabilities website.

EMERGENCY PREPAREDNESS & SAFETY

The safety of students at SMC is a priority. In the event of an emergency, you should contact the SMC Police Department (310-434-4300).

Please note that emergency procedures are posted in this classroom and every classroom. Please take the time to familiarize yourself with these procedures today, when knowledge of what to do can be the most effective. Also, procedures for various emergencies are delineated on the SMC Emergency Preparedness website.

We strongly encourage everyone to use the LiveSafe mobile app that Santa Monica College is providing to all students, faculty, and staff to download for free. The app provides a quick, convenient, and discreet way to communicate directly with Santa Monica

College officials, enhancing your overall safety and allowing Santa Monica College to better serve you. Please use the app to anonymously report any acts of vandalism you may observe.

EMOTIONAL SUPPORT

Over the course of the semester, you may face difficult circumstances beyond your control, such as strained relationships, increased anxiety, alcohol/drug problems, feeling down or depressed, or having difficulty concentrating. Having any of these challenges may create barriers to learning or may make it difficult for you to meet some of the course requirements. If you or someone you know is suffering these or other similarly difficult circumstances, please reach out for support. The staff and faculty of Santa Monica College want you to succeed academically and care about your wellbeing. You may contact the college's Center for Wellness and Wellbeing (LA 110, 310-4344503), which provides short-term mental health services, community referrals, and a 24/7 emotional support line 800-691-6003. Or, if the situation is an emergency, you may contact the SMC Police Department (310-434-4300 or the SMC LiveSafe app). Also, please feel you can contact me so that I can help to direct you to support services on campus that might be most beneficial to you.

EQUITABLE LEARNING ENVIRONMENT

Santa Monica College is an intellectual community enriched and enhanced by diversity along a number of dimensions, including race, ethnicity and national origins, gender and gender identity, disability, sexuality, class and religion. We are especially committed to increasing the representation of those populations that have been historically minoritized in U.S. higher education.

GENDER EXPRESSION AND IDENTITY

I will gladly honor your request to address you by an alternate/preferred name or gender pronoun. Please advise me of this preference early in the semester or session so that I may make appropriate changes to my records. I will do my best to address and refer to all students accordingly and support classmates in doing so as well.

TITLE IX (SEX DISCRIMINATION)

Title IX is a comprehensive federal law that prohibits discrimination on the basis of sex in any federally funded education program or activity: No person in the United States shall, on the basis of sex, be excluded from participation in, be denied the benefits of, or be subjected to discrimination under any education program or activity receiving federal financial assistance.

Those interested in the details should view the Title IX Legal Manual.

Students who have experienced some form of sexual misconduct or discrimination are encouraged to talk to someone about their experience, so they can get the support they need. You can learn more about available support at the Student Services Title IX webpage.

UNDOCUMENTED/DACA/AB540

Santa Monica College stands with the California Community Colleges Chancellor's Office—and hundreds of other educational and business organizations—in affirming that our undocumented students are as integral a part of our community as anyone else. Here at Santa Monica College, we remain committed to serving our undocumented students, to helping them fulfill their life's dreams and aspirations; this college will continue to be a safe environment for all students and personnel. We will work to provide the greatest support to students affected by this decision, and campus and student leaders alike have already rallied in solidarity as well as to provide resources. SMC joins the Chancellor's Office and all the other voices that will advocate determinedly in Congress for an effective solution to this issue, to end a cruel and unnecessary action that goes against the interests of local communities and our country at large.

The **Santa Monica College DREAM Program** provides support services to DREAMers (undocumented, AB540 and DACA recipients). Its purpose is to increase the personal growth, development and retention of DREAM students through academic, career, and personal counseling; assistance in applying for the California Dream Act/Financial Aid and scholarships; and providing

workshops relative to DREAMers and their families. The Dream Program is located in the Student Services Center (SSC) 2nd Floor, Room 238. To make an appointment, call (310) 434-4892 or email DREAM@smc.edu.

STUDENT SUCCESS

Academic Counseling

The Counseling Department at SMC can help you with choosing and enrolling in classes, educational and career planning, navigating Corsair Connect, understanding financial aid, referrals to campus resources, and more.

Black Collegians

The Black Collegians Program/Umoja Community at SMC is designed to assist students of African descent in transferring to four-year universities and obtaining their associate degree. They offer services to help students become academically competitive and to set personal goals.

Extended Opportunity Program & Service (EOPS)

Extended Opportunity Program & Services (EOPS) at Santa Monica College is a program that supports the enrollment, retention, graduation, and transfer of students who are challenged by economic and educational disadvantages. They offer service such as academic, career, personal and transfer counseling; priority registration; supplemental textbook assistance; one-on-one tutoring; and much more.

Latino Center/Adelante

The Adelante Program is a success-oriented program focusing on academic achievement, transfer, cultural awareness, and personal growth. Adelante classes emphasize verbal, written, and critical thinking skills essential to college success. Classes accentuate the Latino experience within the context of the course subject, and most classes offer credits that are transferable to the UC and CSU systems.

Student Health Services Center

The SMC Health Services Center provides primary health care services to currently enrolled Santa Monica College students who have paid the California State mandated health fee. It focuses on health promotion, illness prevention, referrals, health and nutrition education. The staff consists of two registered nurses, a registered dietitian, two health assistants, and a nurse practitioner. The Center is located on the northeast corner of the Cayton Center Complex.

Tutoring

Free tutoring centers are available across the campus. There are dedicated centers for Business, CSIS, ESL, Math, Modern Languages, Science, and Writing & Humanities tutoring. For more information about their hours and locations, visit the SMC Tutoring Services Webpage.

Veterans Resource Center

The Veterans Resource Center at Santa Monica College serves veterans entering college for the first time or returning to college to further their education. The office acts as a liaison with the Veterans Administration verifying enrollment for students claiming benefits under the G.I. Bill or the Veterans' Vocational Rehabilitation Program. It also can also assist the veteran with referrals to various veteran-serving programs in the West Los Angeles area. If you would like additional information, please call (310) 434-8205.

STUDENT SERVICES CENTER

Located at the North end of campus on the corner of Pico and 20th street.

- Admissions & Records
- Black Collegians
- CalWORKs
- Care & Prevention Team
- Guardian Scholars
- High Tech Center
- Institutional Research
- International Education Center

- Career Services Center
- Cashier's Office
- Center for Students with Disabilities
- Counseling
- Distance Education
- DREAM Program
- EOPS/CARE
- Financial Aid & Scholarshipss
- Latino Center
- Pico Partnership
- Scholars Program
- Student Judicial Affairs
- Success & Engagement Center
- Transfer Counseling Center
- Welcome Center

DISCLAIMER

Some elements of the syllabus may be changed at the instructor's discretion. Students will be given at least 48 hours notice of changes whenever possible. If there is any aspect of this syllabus which you do not understand, or to which you take exception, please let the instructor know within the first week of class. Your continued attendance in this course constitutes an acknowledgement and acceptance of the requirements delineated in this syllabus.

PHYSICS 21 **TENTATIVE COURSE CALENDAR** **FALL 2022**

Week #	Date (Monday)	**MONDAY**	**TUESDAY**	**WEDNESDAY**	**THURSDAY**	**FRIDAY**
1	08-29	Introduction LECTURE Chapter 1		LECTURE Chapter 1 EXP #1 Measurement and Errors		LECTURE Chapter 1
2	09-05	HOLIDAY LABOR DAY		LECTURE Chapter 2 EXP #2 Kinematic Diagrams		LECTURE Chapter 2 CH 1 TEST
3	09-12	LECTURE Chapter 2 DROP DEADLINE! (9/11 without W)		LECTURE Chapter 3 EXP #3 Motion of a Freely Falling Body		LECTURE Chapter 3
4	09-19	LECTURE Chapter 3 CH 2 TEST		LECTURE Chapter 4 EXP #4 Projectile Motion		LECTURE Chapter 4
5	09-26	LECTURE Chapter 4 EXP #4 Vector Quantities and the Force Table		LECTURE Chapter 5 CH 3 TEST		LECTURE Chapter 5
6	10-03	LECTURE Chapter 5		LECTURE Chapter 5 CH 4 TEST		LECTURE Chapter 5 EXP #6 Newton's Laws Part 1
7	10-10	LECTURE Chapter 6		LECTURE Chapter 6 CH 5 TEST		LECTURE Chapter 6 EXP #6 Newton's Laws Part 2
8	10-17	LECTURE Chapter 7		LECTURE Chapter 7 CH 6 TEST		LECTURE Chapter 7 EXP #7 Dynamics of Circular Motion

9	10-24	LECTURE Chapter 7 EXP #8 Conservation of Energy		LECTURE Chapter 8 CH 7 TEST		LECTURE Chapter 8 EXP #9 Momentum and Collisions
10	10-31	LECTURE Chapter 8 EXP #10 Ballistic Pendulum		LECTURE Chapter 9 CH 8 TEST		LECTURE Chapter 9
11	11-07	LECTURE Chapter 9 EXP #11 Kinematics of Rotational Motion		LECTURE Chapter 10 CH 9 TEST		HOLIDAY
12	11-14	LECTURE Chapter 10		LECTURE Chapter 10 EXP #12 Torque and Moment of Inertia		LECTURE Chapter 11 CH 10 TEST DROP DEADLINE! (11/19 with W)
13	11-21	LECTURE Chapter 11		LECTURE Chapter 11 EXP #13 Center of Mass and Rotational Equilibrium	Thanksgiving	**Native American Day**
14	11-28	LECTURE Chapter 13 CH 11 TEST		LECTURE Chapter 13 EXP #14 Hooke's Law and Simple Harmonic Motion		LECTURE Chapter 13
15	12-05	LECTURE Chapter 14 CH 13 TEST		LECTURE Chapter 14 EXP #15 Physical Pendulum		LECTURE Chapter 14
16	12-12	LECTURE Chapter 12 Review CH 14 TEST	**FINALS**	**FINALS**	**FINALS**	**Physics 21 Final 12–3 PM**
17	12-19	**FINALS**	**FINALS**			

PHYSICS 22, ELECTRICITY AND MAGNETISM WITH LAB

FALL 2022

COURSE INFORMATION

Course Title:	PHYSICS 22, Electricity and Magnetism with Lab
Section Number:	3010
Units:	5.00 units
Prerequisite(s) or Advisories:	Physics 21
	Mathematics 8
Day and Time:	Monday, Wednesday 09:30 AM–12:15 PM
Location:	SCI 122
Day and Time:	Friday 11:15 AM–12:45 PM
Location:	SCI 122

INSTRUCTOR INFORMATION

Instructor:	Kevin Roberts
Email Address:	Roberts_kevin31@smc.edu
Office Hours:	Monday 12:20–1:20 PM, Wednesday 12:20–1:20, Friday 3:20–4:20 in SCI 275
	Tuesday 12:00–1:00 PM on Zoom (Meeting ID: 809 988 3587, Password: SMCPhys)

I welcome you to contact me outside of class and student hours. You may email me, message me on Canvas or tag me on the class Discord. You may also make office hours by appointment.

COURSE DESCRIPTION

This course is a calculus-based study of electromagnetism covering aspects of electric and magnetic fields, DC and AC circuits, electromagnetic interactions, light, and relativity. The course is intended for engineering and physical science students.

COURSE OBJECTIVES

Upon completion of this course, the student will be able to:

1. Use basic concepts in physics to construct a qualitative explanation of physical phenomena.
2. Use physical principles and laws to construct a quantitative explanation of physical phenomena through mathematical analysis.
3. Utilize various mathematical methods such as algebra, trigonometry, and calculus, to navigate through the quantitative analysis of a physical problem.
4. Proficiently operate and adjust laboratory equipment to obtain quantitative measurements in a physics experiment.
5. Estimate the uncertainty of a measurement and the propagation of error for results dependent upon the measurement.
6. Use various computational tools such as spreadsheets and graphing programs to analyze data.
7. Compose organized and thorough analyses of work done in the laboratory.

STUDENT & INSTITUTIONAL LEARNING OUTCOMES

1. When presented with a physical situation and asked to solve a particular problem in, for example, electricity and magnetism (e.g., the creation of an electric current by a changing magnetic field), the student will follow a logical process based on well-established physics principles (e.g., Maxwell's equations) and demonstrate ability to use basic mathematical techniques, including calculus.

2. When conducting a laboratory experiment and writing a lab report, the student will demonstrate understanding of the basics of the scientific method by being able to state a clear and testable hypothesis, taking careful measurements, estimating uncertainties, and drawing appropriate conclusions based on gathered data and on sound scientific principles.

REQUIRED TEXTS, MATERIALS, & SUPPLIES

1. Young, Freedman, and Ford, University Physics with Modern Physics. 15th ed. WITH MASTERING PHYSICS REQUIRED
   You can get either the digital or hard cover versions if you have an unused Mastering code. We will be using it for online homework.
2. Scientific or graphing calculator. You may use Desmos or Wolfram Alpha.
3. Computer and Internet access.
4. Installed desktop Microsoft office. (Free via SMC)
5. Notebook and writing implement(s) (digital tablets are an acceptable option)

RECOMMENDED RESOURCES & SKILLS

Supplementary Texts

1. Adelson, Get ready for physics
2. McMullen, Essential Calculus-based Physics Study Guide Workbook, Volume 1

Computer Skills

To succeed in this course, you should have the ability to:

- Navigate the Internet using a web browser.
- Manage files using either the Mac or Windows operating systems.
- Send and receive email messages and attachments.
- Use a word processing program like Microsoft Word or its equivalent.
- Navigating Canvas: checking assignment deadlines, uploading work, and checking grades. Every assignment and exam will be hosted here. Check frequently for any updates to assignments.
- Use a spreadsheet program like Microsoft Excel or its equivalent for data analysis for labs.

METHODS OF PRESENTATION

- Lab, Lecture and Discussion, Observation and Demonstration, Experiments, Group Work
- Other Methods: The methods of presentation used in this class reflect the importance of both a conceptual understanding of physics as well as the analytical mastery of the subject. Lecture and class-demonstrations, including computer simulations and videos, are used to introduce topics to students and to ground those ideas. Most experimental work not only reinforces core concepts but teaches experimental measurement techniques and the errors associated with them. Education research has shown that active-engagement instructional strategies greatly improve student learning. As a result, collaborative learning activities are used in lecture and lab as part of the methods of presentation.

METHODS OF EVALUATION

- Chapter Tests: Chapter tests (14 @50 pts each) are mandatory and must be taken when scheduled. Chapter tests will consist of multiple-choice questions, short answer problems, and a free-response problem that you fully work out, chosen from 3. I will provide all physical constants that you will need, and you will make a **hand-written** formula sheet on a single 8.5-by-11-inch sheet of paper (both sides). Tests are **not** cumulative, but concepts build throughout the course. There will be a total of 12 tests, one for each chapter covered (each worth 5% of your grade). I will drop the two lowest-scoring tests.
- Final Exam: This is an optional cumulative exam that can potentially raise your grade. It will be worth the same point count as the same weight as 3 tests. If you well on the exam, I will include it in your final grade. If you do worse, it does not hurt you in any way.

- Lab: Labs will be held each Wednesday unless otherwise noted. The labs that we do will be posted onto Canvas. You are expected to read the week's lab ahead of time, so you can understand before we begin the lab. The experiments can be finished more quickly if you come prepared. Lab reports will be due one week following the lab session, unless otherwise noted. During lab days, we will be breaking up into groups of 3. You will receive a 0 for any missed lab. I will drop your lowest lab score.
- Homework: You will be assigned between 20-30 problems per chapter that you need to finish before a test. We will be using online homework via Pearson's Mastering Physics. You will be able to make unlimited attempts for each question without penalty. For full credit, you will also submit a scanned written hard copy (or answers written by hand on a digital tablet) to Canvas. Full reasoning for EACH question is required for full credit. Anticipate that you will require 6-10 hours to complete the homework each week.
- Pre-lecture Quizzes: Quizzes will be assigned to Mastering. Each quiz will be short and will cover the material that will be covered in lecture that day. Each will be due before class. You can make unlimited attempts at each pre-lecture quiz.
- A grade of "Incomplete" may be granted at the very end of the term if an unforeseen event or illness prevents you from completing the final coursework and at the time you have earned a "C" or better. "Incomplete" grade situations are extremely rare, and are entirely at the discretion of the instructor, within the parameters set above.

Your final grade will be calculated using the following percentages:

Percentage of Grade:	**Evaluation Method:**
60%	Chapter Tests
8%	Pre-lecture Quizzes
16%	Lab Reports
16%	Homework

GRADING SCALE

A = 90.0-100%
B = 80.0-89.9%
C = 65.0-79.9%
D = 55.0-64.9%
F = 54.9% and below

ATTENDANCE, DROPS, & WITHDRAWALS

You are responsible for maintaining your own enrollment status. You may drop the course with a withdrawal through the twelfth week in a regular semester. It is NOT possible to drop the class after the twelfth week of the semester. You should check your Corsair Connect for specific drop dates for each of your courses. General information regarding drop dates, withdrawals, refunds, and other enrollment matters may also be found at the Admissions section of the SMC website. See Admissions Dates and Deadlines for the complete semester schedule including short term courses.

- Attendance is crucial to your success. The class may cover material that is not discussed or found elsewhere, so you will miss out on an essential part of the learning process if absent. Regular attendance is required of every student. You should attend every class, but extenuating circumstances arise that can make this difficult. If you cannot attend a class, please let me know. If circumstances make you miss more than 3 classes during the semester, you may be overextended. I ask that you come see me to discuss your options. Missing 5 class sessions in a row MAY lead you to be dropped from the course by the instructor.
- Sunday, September 11 is the last day to withdraw with no grade showing on your permanent record and a refund. Saturday, November 19 is the last day to withdraw from this class with a grade of W.
- The date of the final is Monday December 19th 8–11 AM. The final exam is optional and comprehensive and is the weight as three other tests. Let me know if you have a conflict with your other final exams.

MISSED AND LATE WORK

- Late work is accepted up until the final day of the semester, but there is a deduction equal to 20% of the assignment. In addition to wanting to avoid the grade penalty, you should make every effort to submit all work by its deadline so you can receive the prompt feedback and grade that are an essential part of the learning process and success in college.
- When absent, you are still responsible for completing and submitting all work on time; however, if you have a documented extenuating circumstance that prevents the timely submission of work, please speak to the instructor as soon as possible to receive an accommodation with a new reasonable deadline.
- Tests are mandatory and must be taken when scheduled. Under compelling circumstances with documentation, they can be made up.

EXTRA CREDIT

You may choose ONE of the following extra credit options. The points will be added to the exam section of your grade.

- You may attend a Distinguished Scientist Lecture and write a two-page analytical reflection paper connecting what you learn at the event to your class materials for up to 10 extra credit points.
- You may participate in the Sustainable Works program for up to 10 extra credit points. For more information visit the Sustainable Works site.

CLASSROOM POLICIES

Class Participation

- Learning is a collaborative exercise; this classroom is your space too! Everyone belongs here, no matter your background. I highly encourage you to be "wrong" here; it is how we learn! If you already knew everything, you wouldn't need me! Sometimes, active participation can feel uncomfortable, particularly if you are unsure of the "answers." One of the themes of this course, as I teach it, is that science (really all knowledge) is a process more than a set of facts. Like a learning a musical instrument, practicing helps us to become better scientists!
- All of us in the class, you, me, your peers, have a responsibility to create an environment in which we can all learn from each other. I expect everyone to participate in class so that we can all benefit from the insights and experiences that each person brings.
- Learning doesn't stop after the class ends; you should all use the course Discord. You should use it to pose homework questions and answer questions of your peers. You can also use it to set up Zoom study groups with each other.

Classroom Environment

- Please ask questions during class
- This classroom is welcoming to all. I expect everyone to be respectful in how they communicate and interact with every person in this class. Racist, sexist, homophobic, and other forms of language that potentially marginalize or demean any student are not tolerated.
- In this class we will be sharing multiple perspectives. Please remember to be respectful with one another.
- You are expected to follow all Codes of Conduct as established by Santa Monica College. These documents can be reviewed at the Student Judicial Affairs webpage. See the rules for Student Conduct (AR 4410), Code of Academic Conduct (AR 4411), Student Honor Code (AR 4412).

Electronic Devices

- Use of electronic devices such as laptops, smartphones, and tablets are permitted in this class. However, to maximize participation and learning, you should limit this usage to activities supporting concurrent class topics.
- Cell phones and other electronic devices should on silent during class time. I recommend putting all electronics on "do not disturb" mode during class to keep you focused.

Food & Drink

Food or drink is prohibited in the classroom except for water bottles, which are permitted if they remain closed when not in active use and are kept away from all equipment.

Recording of Class Lectures

In accordance with Section 78907 of the California Education Code, students shall not use any electronic listening or recording device in any classroom without the prior consent of the instructor, except as necessary to provide reasonable auxiliary aids and academic adjustments to disabled students.

Homework and Lab Reports

- We will be using online homework via Pearson's Mastering Physics. You will be able to make unlimited attempts for each question with no penalty.
- While you are completing the homework, you should write out your reasoning: for simple conceptual questions, a couple of sentences; for longer problems full reasoning, see below.
- The homework in this class can be rather challenging. Anticipate that you will require 6-10 hours to complete the homework each week. You will likely need assistance with at least two or three problems per assignment.
- To ensure that you have enough time available to seek assistance, begin working on the problem sets as soon as possible.
- I encourage you to work with other students to complete homework problems and lab reports. I do expect that each student turn in their own individual work. You are required to turn in a copy of your own handwritten work onto Canvas.
- If you are unable to do a problem, you may post online for other students help, email me to ask for help (see contact information above), or go to office hours. There are also FREE tutors offer via SMC, (https://www.smc.edu/student-support/academic-support/tutoring-centers/index.php) and see below.
- Learning doesn't stop after the class ends; you should all use the course Discord. You should use it to pose homework questions and answer questions of your peers. You can also use it to set up Zoom study groups with each other.

Rules For Homework

I want to you to treat each homework problems with the same level of care as you would on an exam. I give a general outline of the rules you should use for your homework assignments. For each type of problem, I will create a guide on how to set-up and solve that problem.

1. General Appearance of Assignment
   a. Handwriting should be neat, legible, and reasonably dark. If the image contrast is not high enough, you will need to re-upload your document.
   b. Problems must be written in exactly the order assigned. That is, problem 1 should be solved first, then problem 2, etc.
   c. You **must** submit your handwritten work to the "assignment" on Canvas for credit.
   d. For each assignment please only create **ONE** pdf with your favorite scanning software or app.

2. **You may write only one equation or statement per line.** After you have written one equation on a line, go to the next line to write the next equation. If you write small and find this wasteful, you may draw a line down the middle of your paper to make two columns, and then begin working down the right side of the paper after you have completely used up the left side.

3. The following steps must be followed when STARTING a homework problem:
   a. Draw a diagram which presents all information given in the statement of the problem. Any symbolic variables (such as x, t, F, etc.) must either appear in the diagram or be listed next to the diagram.
   b. If appropriate, use your diagram to define a coordinate system.
   c. If information is given as a numerical value (such as 3.0 m, 12.0 s, 8.0 N, etc.), a symbol (such as x, t, F, etc.) must be assigned to the numerical value. For example, if a problem says that a box has a mass of 3.0 kg, you should write "m = 3.0 kg" (if you have more than one mass, use subscripts: m_A, m_B, etc.) on your paper, on or next to the diagram. Do not simply write "3.0kg"; assign a symbol and write "m = 3.0kg". Use a single letter for each numerical value.

4. To begin COMPUTATION: Start your solution by stating a well-known equation you have seen either in lecture or in the text (e.g., $F = ma$, $\Delta x = v_{av}\Delta t$, etc.) that is appropriate to the problem at hand. The first equation in a solution should NEVER have numerical values plugged into it; it should be strictly in "variable" form.

5. When FINISHING a problem: If you have an equation in which the variable you are trying to solve for appears, and all other quantities are known, follow the following steps:
   a. WITHOUT PLUGGING IN NUMBERS, isolate the variable. Exceptions: (1) You may always plug in zero. (2) When you have obtained a quadratic equation, you may work out numerical values for the coefficients, and then plug numerical values for the coefficients into the quadratic formula.
   b. Once you have an equation in which the variable is isolated on one side, plug numerical values (if given) into the quantities on the other side of the equation. **When you plug numerical values into an equation, you must include units with the numerical values.** (See item 8, below.)
   c. Compute the numerical value of the quantity of interest.

6. USE THE CORRECT UNITS.
   a. Every numerical answer must include the correct unit.
   b. Any time a number representing a physical quantity appears in a solution, units must be included. Do not insert numbers into an equation without inserting the accompanying units.

Example:	Example:
$\Delta x = v\Delta t$	$\Delta x = v\Delta t$
$\Delta x = (4)(2)$	$\Delta x = (4\text{m/s})(2\text{s})$
$\Delta x = 8\text{m}$	$\Delta x = 8\text{m}$
WRONG	**RIGHT**

   c. Check to make sure that the correct unit for your answer follows from the computation; do not just "tack on" the correct unit at the end of the problem. This generally requires a simple computation. An example follows:

Example: Suppose you wish to compute the acceleration of a 5-kg object subject to a single 10-N force. You would write:

$$a = \frac{F}{m} = \frac{10\ N}{5\ kg} = \frac{10\cancel{kg}\bullet m/s^2}{5\ \cancel{kg}} = 2\text{m/s}^2$$

Notice that expanding "N" into "kg•m/s^2" allows you to cancel the "kg", leaving m/s^2, which is the correct unit for acceleration.

Example of Homework Presentation

The following example illustrates the use of Homework Rules 5-8, of the syllabus.

Problem:
A jogger is running in a straight line from point A to point B, which are separated by 200 m. He maintains a constant speed of 4 m/s. If the jogger is presently 50 m from A (and 150 m from B), and his stopwatch reads 20 s, what will be the reading on his stopwatch when he reaches B?

Rule 5

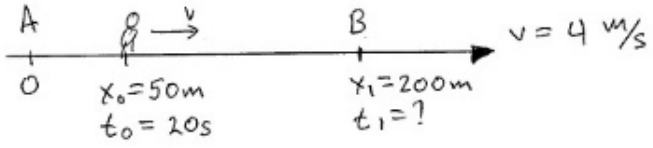

Rule 6 $\{ \; x_1 = x_0 + v(t_1 - t_0)$

Rule 7a
$$\frac{x_1 - x_0}{v} = t_1 - t_0$$
$$t_1 = t_0 + \frac{x_1 - x_0}{v}$$

Rule 7b
$$t_1 = 20s + \frac{200m - 50m}{4\ m/s}$$

Rule 7c
$$t_1 = 20s + 37.5s$$
$$t_1 = 57.5s$$

Rule 8

ACADEMIC HONESTY

The SMC Honor statement, signed by each student upon enrollment, reads: "In the pursuit of the high ideals and rigorous standards of academic life, I commit myself to respect and uphold the Santa Monica College Honor Code, Code of Academic Conduct, and Student Conduct Code. I will conduct myself honorably as a responsible member of the SMC community in all endeavors I pursue." Please be extremely careful that you do not engage in any behavior that could even be construed as cheating. Violations could result in failing grades, reports to the Campus Disciplinarian, and subsequent academic disciplinary action. Examples of behaviors that are not permitted include but are not limited to: Copying another student's homework, inappropriate language or physicality in the classroom, and inappropriate behaviors during an exam (talking with another student, looking at or copying from another student's paper, using a disallowed electronic device or calculator, using disallowed notes, leaving the room without prior permission, removing exam materials from the classroom).

ACCOMMODATIONS FOR DISABILITIES

I encourage students requesting disability-related accommodations to contact the Center for Students with Disabilities as soon as possible. I will work with you and the Center for Students with Disabilities to provide appropriate and reasonable accommodations. An early notification of your request for test-taking and/or other accommodations is necessary to ensure that your disability-related needs are addressed appropriately; testing accommodations cannot be applied retroactively.

The Center for Students with Disabilities is located on the first floor of the Student Services Center, and the phone number is (310) 434-4265 or email at dsps@smc.edu Additional Contact Information can be found at the Center for Students with Disabilities website.

EMERGENCY PREPAREDNESS & SAFETY

The safety of students at SMC is a priority. In the event of an emergency, you should contact the SMC Police Department (310-434-4300).

Please note that emergency procedures are posted in this classroom and every classroom. Please take the time to familiarize yourself with these procedures today, when knowledge of what to do can be the most effective. Also, procedures for various emergencies are delineated on the SMC Emergency Preparedness website.

We strongly encourage everyone to use the LiveSafe mobile app that Santa Monica College is providing to all students, faculty, and staff to download for free. The app provides a quick, convenient, and discreet way to communicate directly with Santa Monica College officials, enhancing your overall safety and allowing Santa Monica College to better serve you. Please use the app to anonymously report any acts of vandalism you may observe.

EMOTIONAL SUPPORT

Over the course of the semester you may face difficult circumstances beyond your control, such as strained relationships, increased anxiety, alcohol/drug problems, feeling down or depressed, or having difficulty concentrating. Having any of these challenges may create barriers to learning or may make it difficult for you to meet some of the course requirements. If you or someone you know is suffering these or other similarly difficult circumstances, please reach out for support. The staff and faculty of Santa Monica College want you to succeed academically and care about your wellbeing. You may contact the college's Center for Wellness and Wellbeing (LA 110, 310-4344503), which provides short-term mental health services, community referrals, and a 24/7 emotional support line 800-691-6003. Or, if the situation is an emergency, you may contact the SMC Police Department (310-434-4300 or the SMC LiveSafe app). Also, please feel you can contact me so that I can help to direct you to support services on campus that might be most beneficial to you.

EQUITABLE LEARNING ENVIRONMENT

Santa Monica College is an intellectual community enriched and enhanced by diversity along a number of dimensions, including race, ethnicity and national origins, gender and gender identity, disability, sexuality, class and religion. We are especially committed to increasing the representation of those populations that have been historically minoritized in U.S. higher education.

GENDER EXPRESSION AND IDENTITY

I will gladly honor your request to address you by an alternate/preferred name or gender pronoun. Please advise me of this preference early in the semester or session so that I may make appropriate changes to my records. I will do my best to address and refer to all students accordingly and support classmates in doing so as well.

TITLE IX (SEX DISCRIMINATION)

Title IX is a comprehensive federal law that prohibits discrimination on the basis of sex in any federally funded education program or activity: No person in the United States shall, on the basis of sex, be excluded from participation in, be denied the benefits of, or be subjected to discrimination under any education program or activity receiving federal financial assistance.

Those interested in the details should view the Title IX Legal Manual.

Students who have experienced some form of sexual misconduct or discrimination are encouraged to talk to someone about their experience, so they can get the support they need. You can learn more about available support at the Student Services Title IX webpage.

UNDOCUMENTED/DACA/AB540

Santa Monica College stands with the California Community Colleges Chancellor's Office—and hundreds of other educational and business organizations—in affirming that our undocumented students are as integral a part of our community as anyone else. Here at Santa Monica College, we remain committed to serving our undocumented students, to helping them fulfill their life's dreams and aspirations; this college will continue to be a safe environment for all students and personnel. We will work to provide the greatest support to students affected by this decision, and campus and student leaders alike have already rallied in solidarity as well as to provide resources. SMC joins the Chancellor's Office and all the other voices that will advocate determinedly in Congress for an effective solution to this issue, to end a cruel and unnecessary action that goes against the interests of local communities and our country at large.

The **Santa Monica College DREAM Program** provides support services to DREAMers (undocumented, AB540 and DACA recipients). Its purpose is to increase the personal growth, development and retention of DREAM students through academic, career, and personal counseling; assistance in applying for the California Dream Act/Financial Aid and scholarships; and providing workshops relative to DREAMers and their families. The Dream Program is located in the Student Services Center (SSC) 2nd Floor, Room 238. To make an appointment, call (310) 434-4892 or email DREAM@smc.edu.

STUDENT SUCCESS

Academic Counseling

The Counseling Department at SMC can help you with choosing and enrolling in classes, educational and career planning, navigating Corsair Connect, understanding financial aid, referrals to campus resources, and more.

Black Collegians

The Black Collegians Program/Umoja Community at SMC is designed to assist students of African descent in transferring to four-year universities and obtaining their associate degree. They offer services to help students become academically competitive and to set personal goals.

Extended Opportunity Program & Service (EOPS)

Extended Opportunity Program & Services (EOPS) at Santa Monica College is a program that supports the enrollment, retention, graduation, and transfer of students who are challenged by economic and educational disadvantages. They offer service such as academic, career, personal and transfer counseling; priority registration; supplemental textbook assistance; one-on-one tutoring; and much more.

Latino Center/Adelante

The Adelante Program is a success-oriented program focusing on academic achievement, transfer, cultural awareness, and personal growth. Adelante classes emphasize verbal, written, and critical thinking skills essential to college success. Classes accentuate the Latino experience within the context of the course subject, and most classes offer credits that are transferable to the UC and CSU systems.

Student Health Services Center

The SMC Health Services Center provides primary health care services to currently enrolled Santa Monica College students who have paid the California State mandated health fee. It focuses on health promotion, illness prevention, referrals, health and nutrition education. The staff consists of two registered nurses, a registered dietitian, two health assistants, and a nurse practitioner. The Center is located on the northeast corner of the Cayton Center Complex.

Tutoring

Free tutoring centers are available across the campus. There are dedicated centers for Business, CSIS, ESL, Math, Modern Languages, Science, and Writing & Humanities tutoring. For more information about their hours and locations, visit the SMC Tutoring Services Webpage.

Veterans Resource Center

The Veterans Resource Center at Santa Monica College serves veterans entering college for the first time or returning to college to further their education. The office acts as a liaison with the Veterans Administration verifying enrollment for students claiming benefits under the G.I. Bill or the Veterans' Vocational Rehabilitation Program. It also can also assist the veteran with referrals to various veteran-serving programs in the West Los Angeles area. If you would like additional information, please call (310) 434-8205.

STUDENT SERVICES CENTER

Located at the North end of campus on the corner of Pico and 20th street. Now (almost) all of the student services **under one roof**! The SMC experience is now better and more convenient for our students!

- Admissions & Records
- Guardian Scholars

- Black Collegians
- CalWORKs
- Care & Prevention Team
- Career Services Center
- Cashier's Office
- Center for Students with Disabilities
- Counseling
- Distance Education
- DREAM Program
- EOPS/CARE
- Financial Aid & Scholarships
- High Tech Center
- Institutional Research
- International Education Center
- Latino Center
- Pico Partnership
- Scholars Program
- Student Judicial Affairs
- Success & Engagement Center
- Transfer Counseling Center
- Welcome Center

DISCLAIMER

Some elements of the syllabus may be changed at the instructor's discretion. Students will be given at least 48 hours notice of changes whenever possible. If there is any aspect of this syllabus which you do not understand, or to which you take exception, please let the instructor know within the first week of class. Your continued attendance in this course constitutes an acknowledgement and acceptance of the requirements delineated in this syllabus.

PHYSICS 22 TENTATIVE COURSE CALENDAR FALL 2022

Week #	Date (Monday)	MONDAY	TUESDAY	WEDNESDAY	THURSDAY	FRIDAY
1	08-29	Introduction LECTURE Chapter 21		LECTURE Chapter 21		LECTURE Chapter 21
2	09-05	HOLIDAY LABOR DAY		LECTURE Chapter 21 EXP #2 Electric Charge		LECTURE Chapter 22 CH 21 TEST
3	09-12	LECTURE Chapter 22 DROP DEADLINE! (9/11 without W)		LECTURE Chapter 22		LECTURE Chapter 23
4	09-19	LECTURE Chapter 23		LECTURE Chapter 24 EXP #4 Equipotential and Lines of Force		LECTURE Chapter 24 CH 22 TEST
5	09-26	LECTURE Chapter 24		LECTURE Chapter 24		LECTURE CH 23 TEST
6	10-03	LECTURE Chapter 25 EXP #6 Resistivity and Ohm's Law		LECTURE Chapter 25		LECTURE Chapter 25 CH 24 TEST
7	10-10	LECTURE Chapter 26		LECTURE Chapter 26		LECTURE Chapter 26 CH 25 TEST
8	10-17	LECTURE Chapter 27		LECTURE Chapter 27 EXP #7 DC circuits, Kirchhoff's Rules		LECTURE Chapter 27 CH 26 TEST

9	10-24	LECTURE Chapter 27		LECTURE Chapter 28 EXP #9 The Oscilloscope		LECTURE Chapter 28 CH 27 TEST
10	10-31	LECTURE Chapter 28		LECTURE Chapter 29 EXP #8 Measurement of e/m		LECTURE Chapter 29
11	11-07	LECTURE Chapter 29 CH 28 TEST		LECTURE Chapter 29 EXP #9 Magnetic Field		HOLIDAY
12	11-14	LECTURE Chapter 30 CH 29 TEST		LECTURE Chapter 30 EXP #11 Faraday's Law and Lenz's Law		LECTURE Chapter 30 DROP DEADLINE! (with W) (11/19)
13	11-21	LECTURE Chapter 30		LECTURE Chapter 31 EXP #12 AC circuits	**Thanksgiving**	**Native American Day**
14	11-28	LECTURE Chapter 31 CH 30 TEST		LECTURE Chapter 31 EXP #14 Breadboading and Circuit Building Techniques		LECTURE Chapter 31
15	12-05	LECTURE Chapter 32 CH 31 TEST		LECTURE Chapter 32 EXP #15 Electromagnetic Waves, Maxwell's Equations		LECTURE Chapter 32
16	12-12	LECTURE Review and Catch-up CH 32 TEST	**FINALS**	**FINALS**	**FINALS**	**FINALS**
17	12-19	**Physics 22 Final 8–11 AM**	**FINALS**			

Self-evaluation Fall 2022 Year 1 Kevin Roberts

It has been wild ride for my first semester as a full-time, tenure track professor at SMC. It is also the first semester back for our students after the pandemic too. I have done a lot of learning over the semester, and I would like to implement what I have learned to my next semester.

Beyond my teaching assignments, I want to remain involved with SMC and grow as a faculty member. I have been involved with a couple of profession growth activities this semester. One where I have learned about giving my student equal access to my course is the Equitizing Gateway Courses (ETAG) led by Forouzan Faridan and Tram Dang. This is the second semester of workshop series. I have learned a lot about how to track student outcomes, particularly Black and Latinx students. And I learned how to make my coursework as accessible as possible. I look forward to learning more from this workshop. I also attended the New Faculty Institute led by Erin Cue. I was only able to minimally participate this semester, but I am glad that I was able to meet some new faculty along the way. I really feel more connected to my fellow faculty at SMC, and I want to deepen next semester too. I also was the faculty advisor to the SMC astronomy club, after one of my students requested it. I let the students mostly take the lead, but I was able to use my past my contacts to get possible speakers for the club. I look forward to what the astronomy club does next semester!

I want to start with what I think I did well. I had very high student retention, with one drop in my physics 22 and two in my physics 21. And I also have had decent student achievement. Despite some initial resistance, my students became accustomed to about 10 hours of homework, lab work, and reading per week. I was able to track these statistics with the online homework Mastering Physics. Most of my students were able to complete the 20-25 physics problems I assigned each week. I could quickly catch the students that fell behind or were taking significantly more time than 10 hours for each weekly assignment. I think that most students were not used to this workload and had trouble connecting with each to form study groups with each other. To kickstart this, I started having after class “workshops” where I supervised a kind of “study hall” for an hour (in addition to office hours). They could ask me questions if they got stuck, the expectation was that they were to work on their work. Over the semester, I noticed that my students started working together and I hope that they can continue to do so. For students that consistently fell behind (in the C or D range), I repeatedly reached out and checked in with them. I think that transitioning out of online courses took many students by surprise. So, I wanted to provide my students as many resources as possible.

I also gave my students as many labs as I could this semester and I think I accomplished this well. In the pandemic, most of students haven’t had hands-on lab experience and I am glad that I was able to provide my students with that experience. Not all the labs were perfect, but I am very glad I had an ambitious schedule, with close to a lab per week. In the end, I covered 13 labs in physics 21 and 11 labs in physics 22. In the future, I want to develop the labs that didn’t work as well to improve my students’ experience. I want my students to have at least one lab for each chapter I cover in the textbook to reinforce what I cover in class.

I also made a conscious effort to learn all my students’ names. It took some practice and time outside of class quizzing myself, but I think this was time well spent. I think my students

appreciated that I was able to call on my student by name in the class. I believe it helped everyone fell welcome in the classroom.

I tried something new this semester, I decided to break up my unit exam (covering about three chapters per test) into smaller, more frequent tests by chapter. I think this had some advantages, but I don't think I will be using this format moving forward. I think having more frequent tests helped lower test-taking anxiety, particularly with this many tests, I decided to drop their lowest two scores. I think my students place a lot of pressure on themselves, and that can cause students to "freeze" during exams. The frequent practice for test-taking was also helpful for my students that may not have had that in their high school.

While I don't regret trying this test schedule out, I noticed that this format had many problems. Firstly, the overhead: I had to write 12 tests for physics 21 and 10 tests for physics 22. I also wrote practice exams for each, which doubled the number of tests I wrote! I think having practice exams is very useful for my students, but that was a massive load of test to write. Also with this many tests, I had to also submit all these materials to DSPS with the proper accommodation forms per exam, per student. This quickly added up. I also then had to grade all these tests. Since they were shorter than my typical exam, they were faster to grade; however, there were times that I began to get behind on my grading. I think I may be able to get more feedback to my students with a switch back to unit exams.

Another problem that I didn't anticipate from the frequent tests: it made my schedule very brittle. I had to change the schedule of labs and test because I didn't have the "breathing room" that a unit exam (given a lecture later) normally does. This changing schedule as compounded the overhead as well. I also noticed that this frequent testing also ate into my lecture time as well. Some of my lectures were a bit rushed to cover the material that I wanted to cover, and I also want to give my student more time to practice in class. And a third problem, noted by my evaluators, is that the themes of the course seem to get a bit muddled with the constant testing. Upon that point of advice, I began implementing more theming in my course. I started on a few lectures noting what the themes I was going to cover in lecture. I want to deepen that in my next semesters teaching.

One idea that I implemented about midway through the semester I think greatly improved the quality of my class time and lectures was more think-pair-share breaks. About midway through the semester, Dr. Nauli noticed that my attendance was flagging, my lectures were very long without breaks for my student engagement, and at times my students were talking during class time. He suggested that I implement more think-pair-share problems. This solved several problems: I made these in-class assignments worth a nominal number of points to get my students back into the class. It gave my lectures natural "breaks" so that my lectures were not overly long. And it gave my students an opportunity to socialize with each other to minimize the chatter. I think this was a massive improvement, as noted by the other evaluators. I haven't completely fixed the chatter during class time; I feel bad about being the "bad guy" because I can still lecture without being bothered. However, as some of the evaluators noted this still is distracting to other students, so towards the end of the semester, I have gotten more confident and assertive on telling my students to "settle down."

Another place for improvement is my organization. While my original syllabi were decent, there was room for improvement. On the advice of the evaluators, I switched over basing my syllabi on the model SMC syllabus. I think this greatly increased clarity for my

students on what my expectations for the class are. I improved my late work policies and attendance policies for the course. I think having this ready to go at the beginning of my course for next semester will be a big improvement.

Overall, I think I learned a lot about how to become a better teacher. I look forward to applying what I learned to my next semester of teaching!

Kevin Roberts

Chapter 1 Test

Multiple Choice: Select one of the answers for credit. You can give justification for incorrect answers and partial credit. (1 point each)

1) Metric system: The current definition of the standard meter of length is based on
A) the distance between the earth's equator and north pole.
B) the distance between the earth and the sun.
C) the distance traveled by light in a vacuum.
D) the length of a particular object kept in France.

---

2) Write out the number 7.35×10^{-5} to decimal notation.
A) 0.00000735
B) 0.0000735
C) 0.000735
D) 0.00735
E) 0.0735

---

3) 0.00325×10^{-8} cm can also be expressed in mm as
A) 3.25×10^{-12} mm.
B) 3.25×10^{-11} mm.
C) 3.25×10^{-10} mm.
D) 3.25×10^{-9} mm.
E) 3.25×10^{-8} mm.

---

4) What is 73.21 cm + 53.2 cm to the correct number of significant figures?
A) 126.41 cm
B) 126.4 cm
C) 126 cm
D) 120 cm
E) 100 cm

---

5) Significant figures: What is the value of $\pi(8.104)^2$, written with the correct number of significant figures?
A) 206.324
B) 206.323
C) 206.3
D) 206
E) 200

---

6) Significant figures: What is 34 + (3) × (1.2465) written with the correct number of significant figures?
A) 37.7
B) 37.74
C) 4×10^1
D) 38
E) 37.7395

---

7) Significant figures: Express $(4.3 \times 10^6)^{-1/2}$ in scientific notation.
A) 4.8×10^{-4}
B) 2.1×10^3
C) 2.1×10^{-5}
D) 2.1×10^4

---

8) Conversion of units: The following exact conversion equivalents are given: 1 m = 100 cm, 1 in = 2.54 cm, and
1 ft = 12 in. If a computer screen has an area of 1.27 ft^2, this area is closest to
A) 0.00284 m^2.
B) 0.0465 m^2.
C) 0.118 m^2.
D) 0.284 m^2.
E) 4.65 m^2.

---

9) If A > B, under what condition is $|\vec{A} - \vec{B}| = A - B$?
A) The statement is never true.
B) Vectors $\vec{A}$ and $\vec{B}$ are in opposite directions.
C) Vectors $\vec{A}$ and $\vec{B}$ are in the same direction.
D) Vectors $\vec{A}$ and $\vec{B}$ are in perpendicular directions.
E) The statement is always true.

Use the figure to the right for questions 10 and 11

10) Vectors $\vec{A}$ and $\vec{B}$ are shown in the figure. Vector $\vec{C}$ is given by $\vec{C} = \vec{B} - \vec{A}$. The magnitude of vector $\vec{A}$ is 16.0 units, and the magnitude of vector $\vec{B}$ is 7.00 units. What is the magnitude of vector $\vec{C}$?

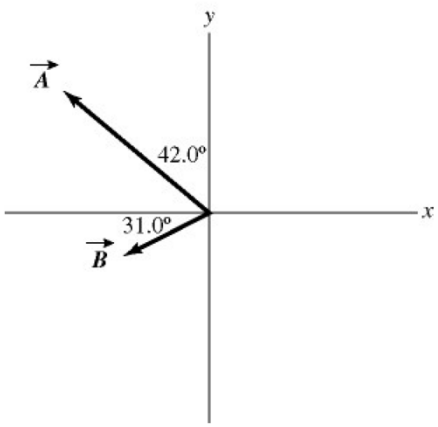

A) 9.00
B) 9.53
C) 15.5
D) 16.2
E) 17.5

---

11) Vectors $\vec{A}$ and $\vec{B}$ are shown in the figure. Vector $\vec{C}$ is given by $\vec{C} = \vec{B} - \vec{A}$. The magnitude of vector $\vec{A}$ is 16.0 units, and the magnitude of vector $\vec{B}$ is 7.00 units. What is the angle of vector $\vec{C}$, measured counterclockwise from the +x-axis?

A) 16.9°
B) 22.4°
C) 73.1°
D) 287°
E) 292°

---

12) Components: The components of vector $\vec{A}$ are A_x = + 3.90 and A_y = -4.00. What is the angle measured counterclockwise from the +x-axis to vector $\vec{A}$?

A) 314°
B) 134°
C) 224°
D) 136°
E) 46.0°

Conceptual Questions: (2 points each)

1. The U.S. National Institute of Standards and Technology (NIST) maintains several accurate copies of the international standard kilogram. Even after careful cleaning, these national standard kilograms have gained mass (10^{-6} g/year) compared every 10 years or so to the standard international kilogram. Does this apparent increase have any importance? Explain.

2. Can you find two vectors with different lengths that have a vector sum of zero? What length restrictions are required for three vectors to have a vector sum of zero? Explain.

3. How many correct experiments do we need to disprove a theory? How many do we need to prove a theory? Explain.

Choose one of three (32 points)

1. The Hydrogen Maser. A maser is a laser-type device that produces electromagnetic waves with frequencies in the microwave and radio-wave bands of the electromagnetic spectrum. You can use the radio waves generated by a hydrogen maser as a standard of frequency. The frequency of these waves is 1,420,405,751.786 hertz. (A hertz is another name for one cycle per second.) A clock controlled by a hydrogen maser is off by only 1 s in 100,000 years. For the following questions, use only three significant figures. (The large number of significant figures given for the frequency simply illustrates the remarkable accuracy to which it has been measured.
   (a) What is the time for one cycle of the radio wave?
   (b) How many cycles occur in 1 h?
   (c) How many cycles would have occurred during the age of the earth, which is estimated to be 4.6×10^9 years?
   (d) By how many seconds would a hydrogen maser clock be off after a time interval equal to the age of the earth?

2. Consider the following measurement of a cylinder:

Diameter:

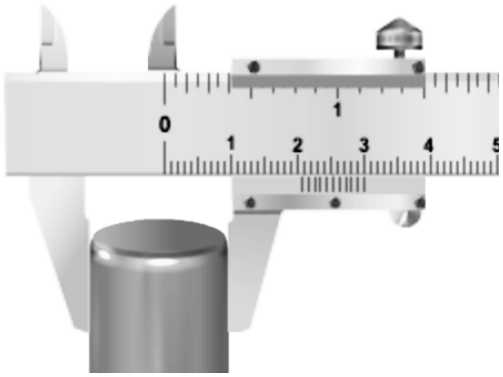

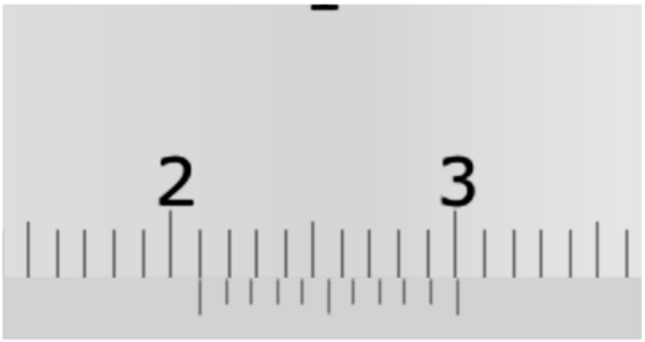

Length:

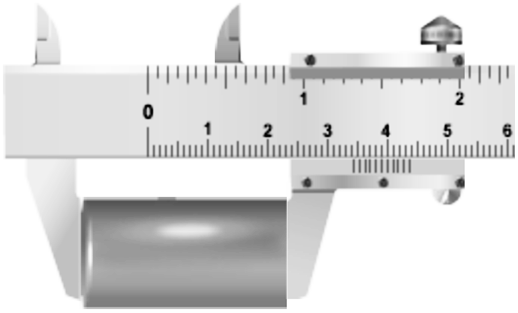

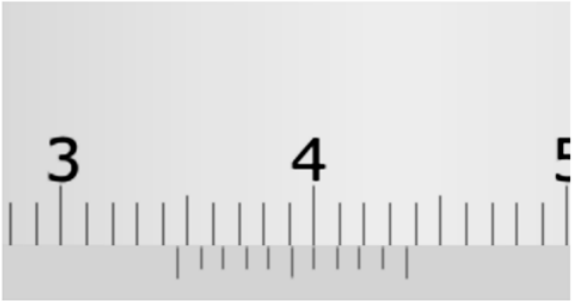

Mass (Assume it is the same cylinder)

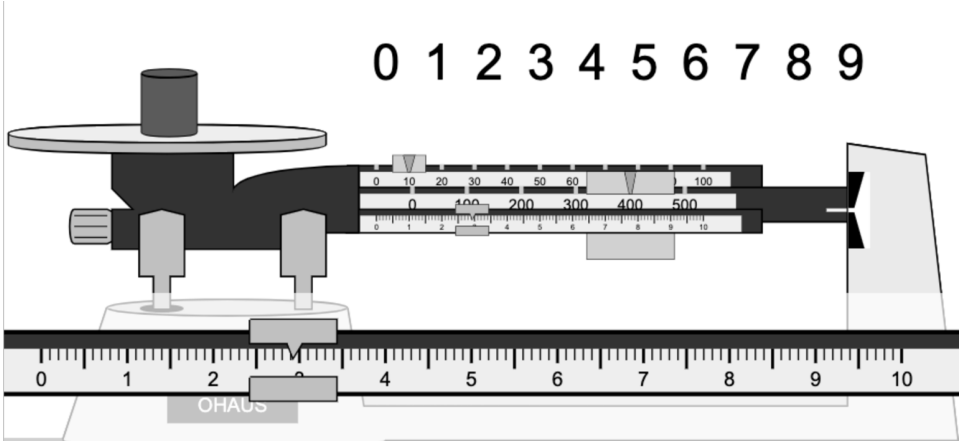

a) Find the area of base of the cylinder

b) Find the volume of the cylinder

c) Find the mass of the cylinder

d) The density of the cylinder

Give the uncertainty (using propagation of uncertainty like in the lab) in each value and round to the correct number of significant figures (only at the last step).

3. A spelunker is surveying a cave. She follows a passage 180 m straight west, then 210 m in a direction 45° east of south, and then 280 m at 30° east of north. After a fourth displacement, she finds herself back where she started. Use the method of components to determine the magnitude and direction of the fourth displacement in the following steps.
(a) Draw a vector diagram representing the exploration so far, using the tip-to-tail or parallelogram method. Give each displacement vector a name.

(b) Draw a coordinate axis to represent North, South, East, and West.

(c) break each vector into components along that coordinate axis.

(d) What is the spelunker's total displacement from their starting point in components (before the fourth displacement)?

(e) To return to the starting point, the spelunker travels _____ m away at an angle of _____ measured from east.

Chapter 2 Test

Multiple Choice: Select one of the answers for credit. You can give justification for incorrect answers and partial credit. (1 point each)

1) When can we be certain that the average velocity of an object is always equal to its instantaneous velocity?
A) always
B) never
C) only when the velocity is constant
D) only when the acceleration is constant
E) only when the acceleration is changing at a constant rate

---

2) Basic kinematics variables: The motions of a car and a truck along a straight road are
represented by the velocity-time graphs in the figure. The two vehicles are initially alongside
each other at time t = 0. At time T, what is true about these two vehicles since time t = 0?

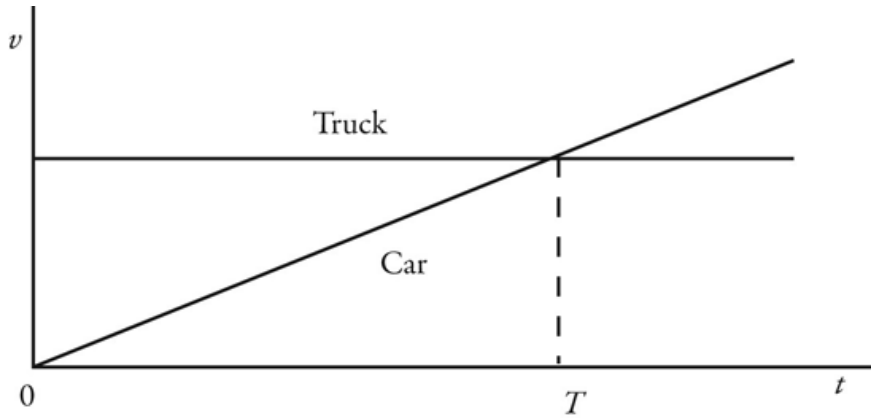

A) The truck will have traveled further than the car.
B) The car will have traveled further than the truck.
C) The truck and the car will have traveled the same distance.
D) The car will be traveling faster than the truck.

---

3) A package is dropped from a helicopter moving upward at If it takes
before the package strikes the ground, how high above the ground was the package when it was
released if air resistance is negligible?
A) 810 m
B) 1000 m
C) 1200 m
D) 1500 m

---

4) On the earth, when an astronaut throws a 0.250-kg stone vertically upward, it returns to his hand a time T later. On planet X he finds that, under the same circumstances, the
stone returns to his hand in 2T. In both cases, he throws the stone with the same initial velocity
and it feels negligible air resistance. The acceleration due to gravity on planet X (in terms of g) is A) g/4.
B) g/2.
C) $g/\sqrt{2}$.
D) $g\sqrt{2}$.
E) 2g.

---

5) The graph in the figure shows the position of an object as a function of time. The letters H-L represent moments of time. At which moments shown (H, I, etc.) is the speed of the object is smallest?

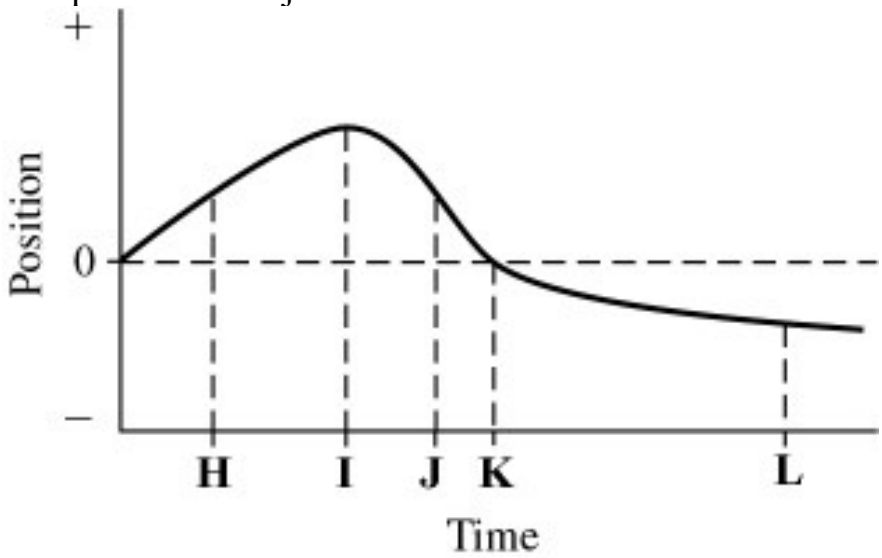

A) H
B) I
C) J
D) K
E) L

---

6) The figure represents the position of a particle as it travels along the x-axis. Between t = 2 s and t = 4 s, which is larger the average speed of the particle or the average velocity of the particle?

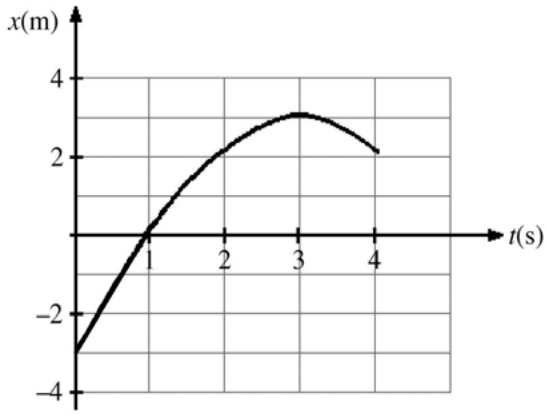

A) average speed
B) average velocity
C) they are the same
D) one is positive and the other is negative

---

7) The acceleration of an object as a function of time is given by $a_x = \left(3.00\frac{m}{s^3}\right)t$ where t is in seconds. If the object is at rest at time $t = 0.00$ s, what is the velocity of the object at time $t = 6.00\ s$?
A) 18.0 m/s
B) 54.0 m/s
C) 0.00 m/s
D) 15.0 m/s
E) 108 m/s

---

8) A car is 200 m from a stop sign and traveling toward the sign at 40.0 m/s. At this time, the driver suddenly realizes that she must stop the car. If it takes 0.200 s for the driver to apply the brakes, what must be the magnitude of the constant acceleration of the car after the brakes are applied so that the car will come to rest at the stop sign?
A) 2.89 m/s^2
B) 3.89 m/s^2
C) 4.17 m/s^2
D) 3.42 m/s^2
E) 2.08 m/s^2

---

9) A ball rolls across a floor with an acceleration of 0.100 m/s^2 in a direction opposite to its velocity. The ball has a velocity of 4.00 m/s after rolling a distance 6.00 m across the floor. What was the initial speed of the ball?
A) 4.15 m/s
B) 5.85 m/s
C) 4.60 m/s
D) 5.21 m/s
E) 3.85 m/s

---

10) The velocity of an object is given by the expression $v(t) = 3.00$ m/s $+ (4.00$ m/s$)t^2$, where t is in seconds. Determine the position of the object as a function of time if it is located at x = 1.00 m at time t = 0.000 s.

A) $(4.00$ m/s$)t + 1.00$ m

B) $(3.00$ m/s $)t + (1.33$ m/s$^3)t^3$

C) $(4.00$ m/s$)t$

D) 1.33 m

E) 1.00 m $+(3.00$ m/s $)t + (1.33$ m/s$^3)t^3$

Conceptual Questions: (2 points each)

1. Under what conditions does the magnitude of the average velocity equal the average speed? Give an example if it exists. If not, explain why it is impossible.

2. Prove these statements: (a) As long as you can ignore the effects of the air, if you throw anything vertically upward, it will have the same speed when it returns to the release point as when it was released. (b) The time of flight will be twice the time it takes to get to its highest point.

3. If you know the initial position and initial velocity of a vehicle and have a record of the acceleration at each instant, can you compute the vehicle's position after a certain time? If so, explain how this might be done.

Choose one of three (32 points)

1. In the fastest measured tennis serve, the ball left the racquet at 73.14 m/s. A served tennis ball is typically in contact with the racquet for 30.0 ms and starts from rest. Assume constant acceleration. Find the distance the racquet was in contact with the ball and acceleration of the tennis ball in the following steps:
   (a) Draw a clear motion diagram illustrating the problem
   (b) Draw a coordinate system, with a clearly marked origin.
   (c) Identify and number the moments of interest (make sure to draw any vectors that are constant on the side)
   (d) Write the kinematic variables for each moment of interest and fill in the known kinematic variables
   (e) Write down the equations you will use to solve the equation for the unknown variables
   (f) Solve the equations via algebra (do **NOT** plug in numbers for a variable unless that number is zero)

   Give you answers to **3 sig fig**

2. A lunar lander is making its descent to Moon Base I. The lander descends slowly under the retro-thrust of its descent engine. The engine is cut off when the lander is 5.0 m above the surface and has a downward speed of 0.8 m/s. With the engine off, the lander is in free fall. The acceleration due to gravity on the moon is $g_M = 1.6$ m/s^2. With an extremely thin atmosphere on the Moon, you can safely ignore air resistance.

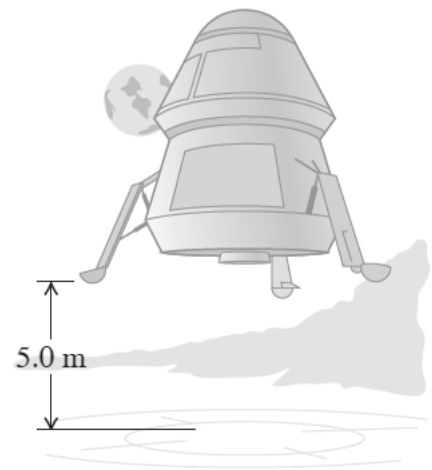

   a. Draw a motion diagram of the motion of the lander.
   b. Draw a coordinate system, with a clearly marked origin.
   c. Identify and number the moments of interest (make sure to draw any vectors that are constant on the side)
   d. What is the speed of the lander just before it touches the surface?
   e. Draw $y(t)$, $v_y(t)$, and $a_y(t)$ graphs

Give you answers to **3 sig figs**

3. The engineer of a passenger train traveling at 25.0 m/s sights a freight train whose caboose is 200 m ahead on the same track. The freight train is traveling at 15.0 m/s in the same direction as the passenger train. The engineer of the passenger train immediately applies the brakes, causing a constant acceleration of 0.100 m/s^2 in a direction opposite to the train's velocity, while the freight train continues with constant speed. Take x = 0 at the location of the front of the passenger train when the engineer applies the brakes.
   (a) Draw a clear motion diagram illustrating the problem, making the positions of the front of the passenger train and the back of the freight train two dots
   (b) Draw a coordinate system, with a clearly marked origin.
   (c) Identify and number the moments of interest (make sure to draw any vectors that are constant on the side)
   (d) Write the kinematic variables for each moment of interest and fill in the known kinematic variables
   (e) Write down the equations you will use to solve the equation for the unknown variables
   (f) Solve the equations via algebra (do **NOT** plug in numbers for a variable unless that number is zero)
   (g) Will the cows nearby witness a collision?
   (h) If so, where will it take place?
   (i) On a single graph, sketch the positions of the front of the passenger train and the back of the freight train.

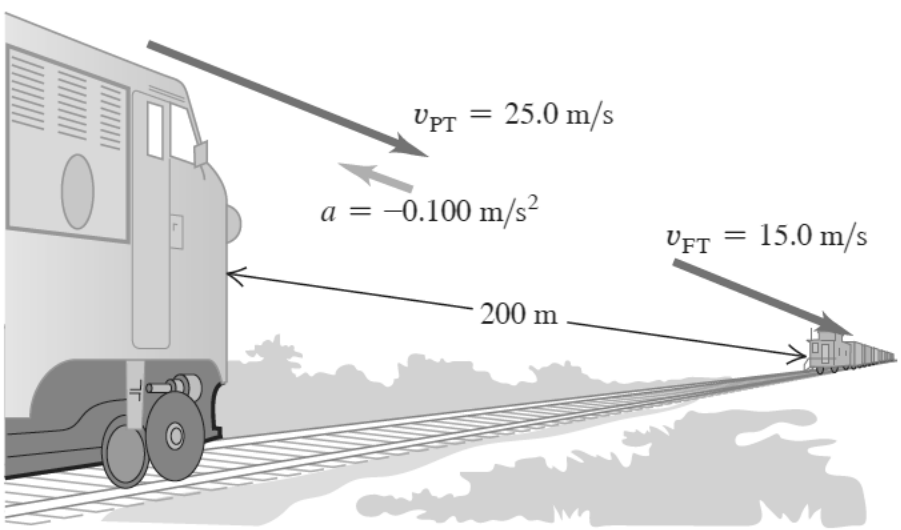

Chapter 21 Test

Multiple Choice: Select one of the answers for credit. You can give justification for incorrect answers and partial credit. (1 point each)

1) Charge: A piece of plastic has a net charge of +2.00 μC. How many more protons than electrons does this piece of plastic have? ($e = 1.60 \times 10^{-19}$ C)
A) 1.25×10^{13}
B) 1.25×10^{19}
C) 2.50×10^{13}
D) 2.50×10^{19}

---

2) Coulomb's law: When two point-charges are 2.0 cm apart, each one experiences a 1.0-N electric force due to the other charge. If they are moved to a new separation of 8.0 cm, the electric force on each of them is closest to
A) 1.0 N.
B) 4.0 N.
C) 16 N.
D) 0.25 N.
E) 0.063 N.

---

3) Electric field of multiple point-charges: Two point-charges Q_1 and Q_2 of equal magnitudes
and opposite signs are positioned as shown in the figure. Which of the arrows best represents the net electric field at point P due to these two charges?

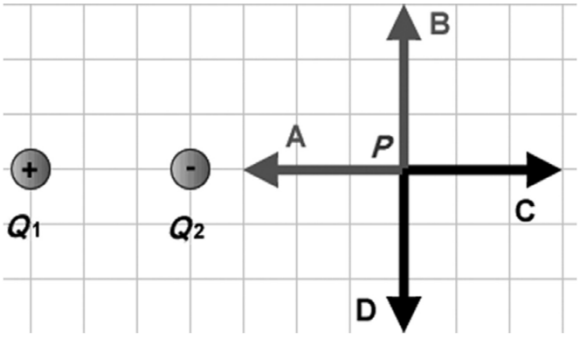

A) A
B) B
C) C
D) D
E) The field is equal to zero at point P.

---

4) Coulomb's law: When two point-charges are a distance d part, the electric force that each one feels from the other has magnitude F. To make this force twice as strong, the distance would have to be changed to

A) 2d.
B) $d\sqrt{2}$.
C) $d/\sqrt{2}$.
D) d/2.
E) d/4.

---

5) Four equal negative point-charges are placed at three of the corners of a square of side d as shown in the figure. Which of the arrows represents the direction of the net electric field at the center of the square?

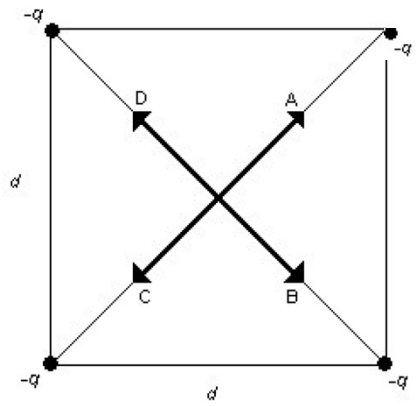

A) A
B) B
C) C
D) D
E) The field is equal to zero at point P.

---

6) One very small uniformly charged plastic ball is located directly above another such charge in a test tube as shown in the figure. The balls are in equilibrium a distance d apart. If the charge on each ball is doubled, the distance between the balls in the test tube would become

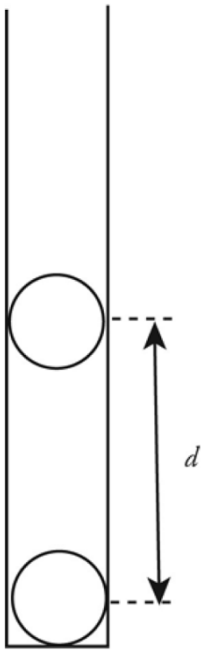

A) $d\sqrt{2}$.
B) 2d.
C) 4d.
D) 8d.

---

7) The figure shows two unequal point charges, q and Q, of opposite sign. Charge Q has greater magnitude than charge q. In which of the regions X, Y, Z will there be a point at which the net electric field due to these two charges is zero?

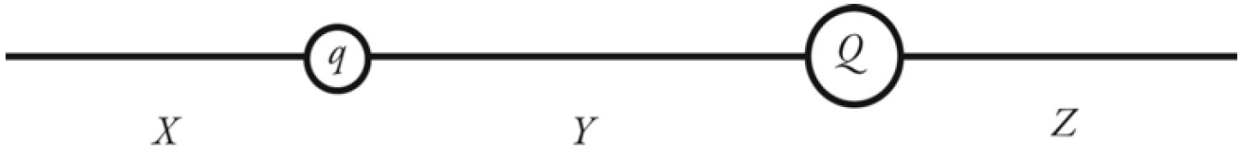

A) only regions X and Z
B) only region X
C) only region Y
D) only region Z
E) all three regions

---

8) Electric field of multiple point-charges: The figure shows three electric charges labeled Q_1, Q_2, Q_3, and some electric field lines in the region surrounding the charges. What are the signs of the three charges?

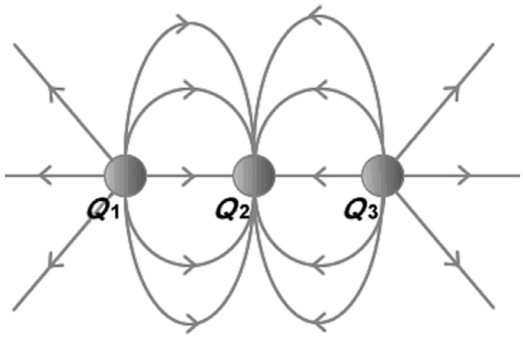

A) Q_1 is positive, Q_2 is negative, Q_3 is positive.
B) Q_1 is negative, Q_2 is positive, Q_3 is negative.
C) Q_1 is positive, Q_2 is positive, Q_3 is negative.
D) All three charges are negative.
E) All three charges are positive.

---

9) Parallel plates: Two large, flat, horizontally oriented plates are parallel to each other, a distance d apart. Halfway between the two plates the electric field has magnitude E. If the separation of the plates is reduced to d/2 what is the magnitude of the electric field halfway between the plates?

A) 4E
B) 2E
C) E
D) 0
E) E/2

Conceptual Questions: (2 points each)

1. Why is water having permanent electric dipole essential for life?

2. Two metal spheres are hanging from nylon threads. When you bring the spheres close to each other, they tend to attract. Based on this information alone, discuss all the possible ways that the spheres could be charged. What would happen after the two spheres after they touched? Explain.

3. If you walk across a nylon rug and then touch a large metal object such as a doorknob, you may get a spark and a shock. Why does this tend to happen more on dry days than on humid days? (*Hint:* thing about the properties of water.) Why are you less likely to get a shock if you touch a *small* metal object, such as a paper clip?

Choose one of three (35 points)

1. The Positive charge Q is distributed uniformly along the positive y-axis between y=0 and y=a. A negative point charge -q lies on the positive x-axis, a distance x from the origin.
   (a) Calculate the x- and y-components of the electric field produced by the charge distribution Q at points on the positive x-axis.
   (b) Calculate the x- and y-components of the force that the charge distribution Q exerts on q.
   (c) Show that if x >> a, $F_x \sim -Qq/(4\pi\varepsilon_0 x^2)$ and $F_y \sim +Qqa/(4\pi\varepsilon_0 x^3)$
   (d) Why does this happen in the limit in part (c)?

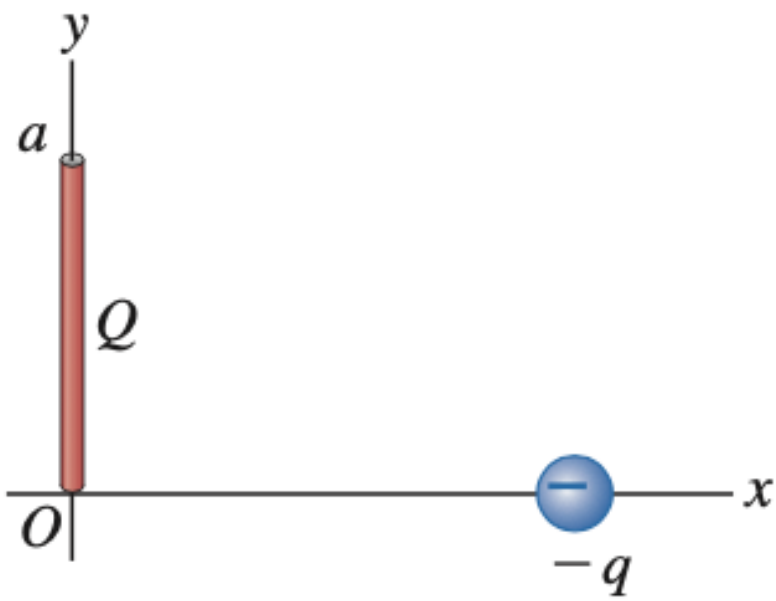

2. A point charge is placed at each corner of a square with side length a. All charges have magnitude q. Two of the charges are positive and two are negative. What is the direction of the net electric field at the center of the square due to the four charges, and what is its magnitude in terms of q and a?

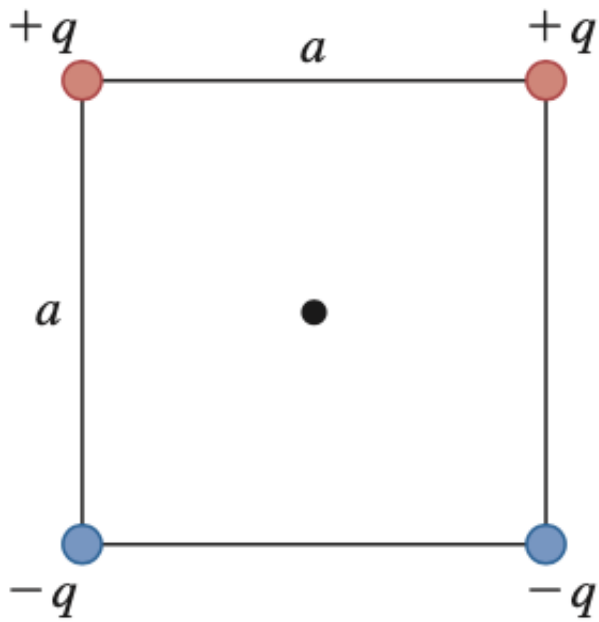

3. Two charges are placed on the *x*-axis: one, of $Q_1 = 2.50\ \mu C$, at the origin and the other, of $Q_2 = -3.50\ \mu C$, at $x = 0.600$ m. Find the position on the *x*-axis where the net force on a small charge $q_0 = +q$ would be zero.

Hint: Where should small charge q_0 be placed for the two forces to be in opposite directions? Should q_0 be closer to Q_1 or Q_2?

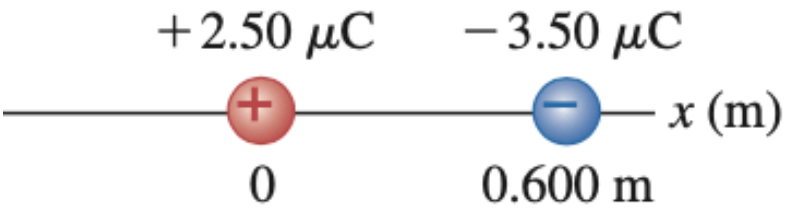

Chapter 22 Test

Multiple Choice: Select one of the answers for credit. You can give justification for incorrect answers and partial credit. (1 point each)

1) If the electric flux through a closed surface is zero, the electric field at points on that surface must be zero.
A) True
B) False

---

2) The figure shows four Gaussian surfaces surrounding a distribution of charges, which Gaussian surfaces have no electric flux through them?
A)
B)
C)
D)

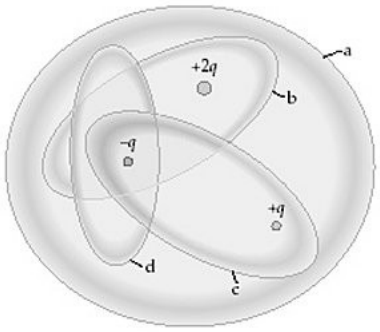

---

3) The graph in the figure shows the electric field strength (not the field lines) as a function of distance from the center for a pair of concentric uniformly charged spheres. Which of the following situations could the graph plausibly represent?

A) a positively charged conducting sphere within another positively charged conducting sphere
B) a positively charged conducting sphere within an uncharged conducting sphere
C) a solid nonconducting sphere, uniformly charged throughout its volume, inside of a positively charged conducting sphere
D) a positively charged nonconducting thin-walled spherical shell inside of a positively charged conducting sphere
E) a positively charged nonconducting thin-walled spherical shell inside of another positively charged nonconducting thin-walled spherical shell

---

---

4) At a distance D from a very long (essentially infinite) uniform line of charge,

the electric field strength is 1000 N/C. At what distance from the line will the field strength to be 2000 N/C?
A) 2D
B) $\sqrt{2}$D
C) D/$\sqrt{2}$
D) D/2
E) D/4

---

5) A charge Q is uniformly spread over one surface of a very large nonconducting square elastic sheet having sides of length d. At a point P that is 1.25 cm outside the sheet, the magnitude of the electric field due to the sheet is E. If the sheet is now stretched so that its sides have length 2d, what is the magnitude of the electric field at P?
A) 4E
B) 2E
C) E
D) E/2
E) E/4

---

6) Under electrostatic conditions, the electric field just outside the surface of any charged conductor
A) is always parallel to the surface.
B) is always zero because the electric field is zero inside conductors.
C) is always perpendicular to the surface of the conductor.
D) is perpendicular to the surface of the conductor only if it is a sphere, a cylinder, or a flat sheet.
E) can have nonzero components perpendicular to and parallel to the surface of the conductor.

---

7) A nonuniform electric field is directed along the x-axis at all points in space. This magnitude of the field varies with x, but not with respect to y or z. The axis of a cylindrical surface, 0.80 m long and 0.20 m in diameter, is aligned parallel to the x-axis, as shown in the figure. The electric fields E_1 and E_2, at the ends of the cylindrical surface, have magnitudes of 6000 N/C and 1000 N/C respectively and are directed as shown. What is the net electric flux

passing through the cylindrical surface?

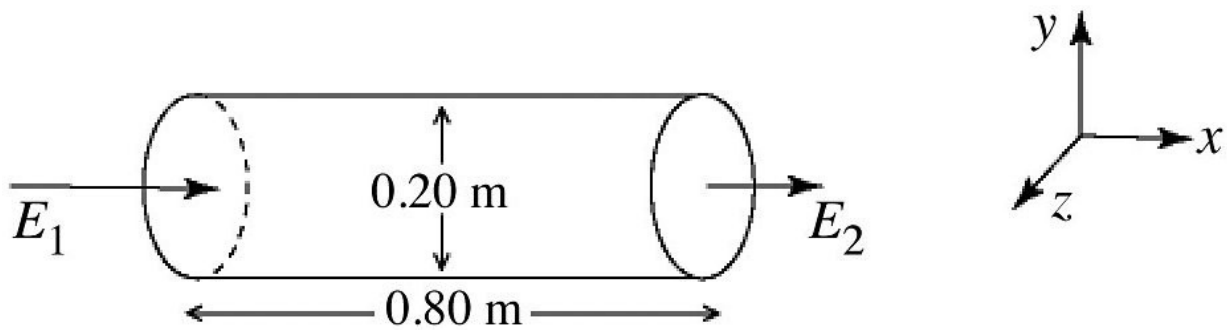

A) -160 N · m^2/C
B) -350 N · m^2/C
C) 0.00 N · m^2/C
D) +350 N · m^2/C
E) +160 N · m^2/C

---

8) A charge q = 2.00 μC is placed at the origin in a region where there is already a uniform electric field $\vec{E}$= (100 N/C) $\hat{\imath}$ Calculate the flux of the net electric field through a Gaussian sphere of radius R = 10.0 cm centered at the origin. ($\varepsilon_0 = 8.85 \times 10^{-12}$ C^2/N · m^2)

A) 5.52×10^5 N · m^2/C
B) 1.13×10^5 N · m^2/C
C) 2.26×10^5 N · m^2/C
D) zero

---

9) An infinitely long nonconducting cylinder of radius R = 2.00 cm carries a uniform volume charge density of 180 μC/m^3. Calculate the electric field at distance r = 1.00 cm from the axis of the cylinder. ($\varepsilon_0 = 8.85 \times 10^{-12}$ C^2/N · m^2)
A) 2.50×10^3 N/C
B) 5.10×10^3 N/C
C) zero
D) 2.00×10^3 N/C
E) 10.2×10^3 N/C

---

10) Electric charge is uniformly distributed inside a nonconducting sphere of radius 0.30 m. The electric field at a point P, which is 0.50 m from the center of the sphere, is 15,000 N/C and is directed radially outward. What is the maximum magnitude of the electric field due to this sphere?
A) 25,000 N/C
B) 30,000 N/C
C) 36,000 N/C
D) 42,000 N/C
E) 48,000 N/C

---

11) A hollow conducting spherical shell has radii of 0.80 m and 1.20 m, as shown in the figure. The sphere carries a net excess charge of -500 nC. A point charge of +300 nC is present at the center. ($k = 1/4\pi\varepsilon_0 = 8.99 \times 10^9$ N · m^2/C) The radial component of the electric field at a point that is 0.60 m from the center is closest to
A) zero.
B) +5000 N/C.
C) +7500 N/C.
D) -5000 N/C.
E) -7500 N/C.

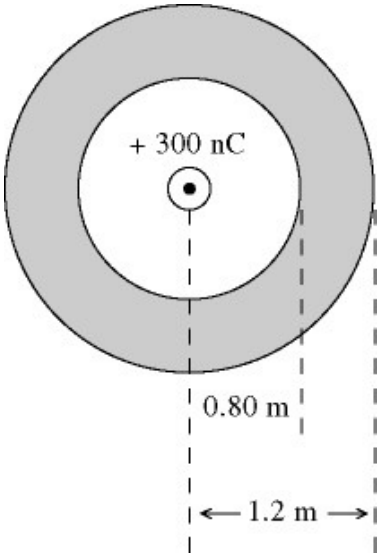

---

12) As shown in the figure, a square insulating slab 5.0 mm thick measuring 2.0 m × 2.0 m has a charge of 8.0 × 10-11 C distributed uniformly throughout its volume. Use Gauss's law to determine the electric field at point P, which is located within the slab beneath its center, 1.0 mm from one of the faces. ($\varepsilon_0 = 8.85 \times 10^{-12}$ C^2/N · m^2)

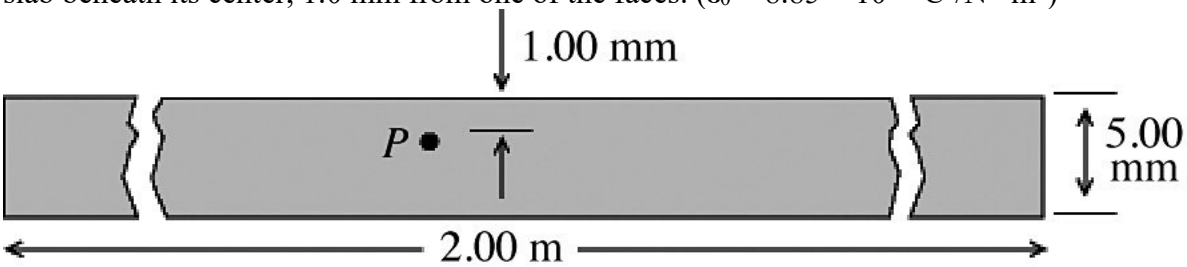

A) 0.68 N/C
B) 14 N/C
C) 23 N/C
D) 34 N/C
E) 57 N/C

Conceptual Questions: (2 points each)

1. A spherical Gaussian surface encloses a point charge q. If the point charge is moved from the center of the sphere to a point away from the center, does the electric field at a point on the surface change? Does the total flux through the Gaussian surface change? Explain. Include **two** diagrams in your explanation.

2. A rubber balloon has a single point charge in its interior. Does the electric flux through the balloon depend on whether it is fully inflated? Explain your reasoning. Include **two** diagrams.

3. In a conductor, one or more electrons from each atom are free to roam throughout the volume of the conductor. Does this contradict the statement that any excess charge on a solid conductor must reside on its surface? Why or why not?

Choose one of three (32 points)

1. A very long insulating cylinder has radius R and carries positive charge distributed throughout its volume. The charge distribution has cylindrical symmetry but varies with perpendicular distance from the axis of the cylinder. The volume charge density is $\rho(r) = \alpha\ (1 - r/R)$, where α is a constant with units C/m^3 and r is the perpendicular distance from the center line of the cylinder.
   (a) Draw a diagram of the situation
   (b) Derive an expression, in terms of α and R, for E(r), the electric field as a function of r, when $r < R$.
   (c) Repeat part (b) for $r > R$.
   (d) At what value of r, in terms of R, does the electric field have its maximum value?

2. A small conducting spherical shell with inner radius a and outer radius b is concentric with a larger conducting spherical shell with inner radius c and outer radius d. The inner shell has total charge +2q, and the outer shell has charge +4q.

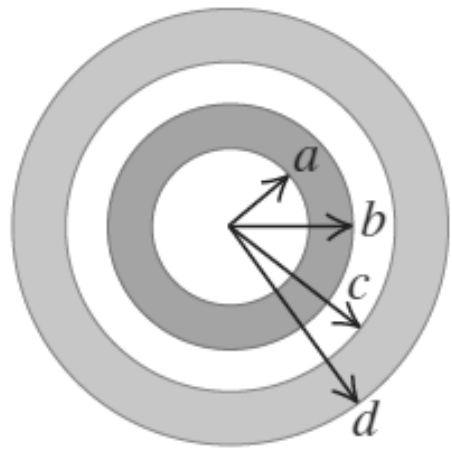

(a) Calculate the electric field $\vec{E}$ (magnitude and direction) in terms of q and the distance r from the common center of the two shells for

(i) $r < a$

(ii) $a < r < b$

(iii) $b < r < c$

(iv) $c < r < d$;

(v) $r > d$.

(vi) Graph the radial component of $\vec{E}$ as a function of r.

(b) What is the total charge on the

(i) inner surface of the small shell;

(ii) outer surface of the small shell;

(iii) inner surface of the large shell;

(iv) outer surface of the large shell

3. Two very large, nonconducting plastic sheets, each 10.0 cm thick, carry uniform charge densities σ_1, σ_2, σ_3, and σ_4 on their surfaces. These surface charge densities have the values $\sigma_1 = -6.00\ \mu\text{C/m}^2$, $\sigma_2 = +5.00\ \mu\text{C/m}^2$, $\sigma_3 = +2.00\ \mu\text{C/m}^2$, and $\sigma_4 = +4.00\ \mu\text{C/m}^2$. Use Gauss's law to find the magnitude and direction of the electric field at the following points, far from the edges of these sheets:

(a) point A, 5.00 cm from the left face of the left-hand sheet;
(b) point B, 1.25 cm from the inner surface of the right-hand sheet;
(c) point C, in the middle of the right-hand sheet
(d) draw graph of the electric field as a function of horizontal distance, specify where your origin is.

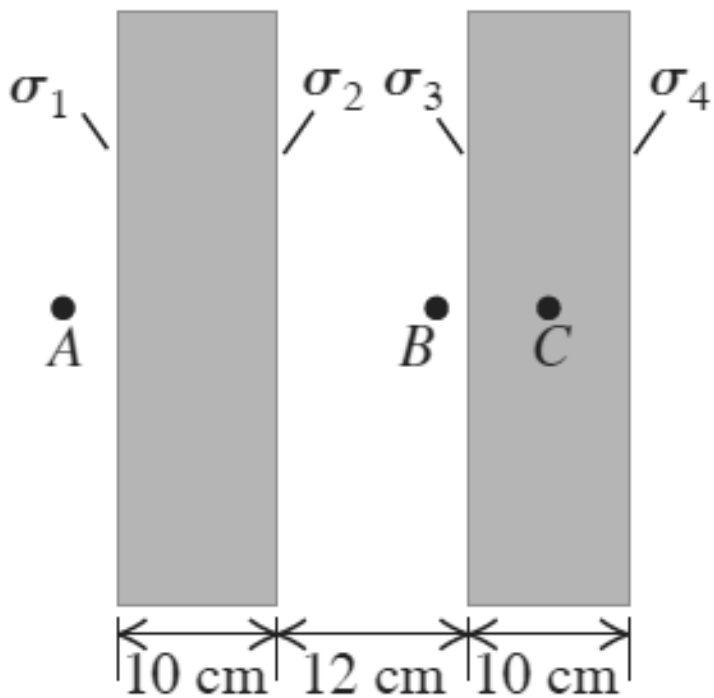

Kevin Roberts's First Year Fall 2022 Evaluation

Evaluation Committee Members

1. Lydia Ayala, Administrator and Committee Chair
2. Sehat Nauli, Department Chair
3. Emin Menachekanian, Department Peer
4. Keith Ouellette, Non-Department Peer

Things to remember:

1. Classroom visits will be unannounced.
2. Faculty observation forms must be made available 24 hours before conference.
3. Professionalism form must be made available 24 hours before conference with the department chair.
4. Final meeting date **December 13 at 10:00 am.** Zoom link will be sent one week before.

Fall Schedule

	Assignmen	Time	Days	Bldg	Room	T
L	PHYSCS 21	01:45PM-04:50PM	.M.W...	SCI	106	
2	PHYSCS 21	01:15PM-03:15PM	.....F.	SCI	106	
L	PHYSCS 22	09:30AM-12:15PM	.M.W...	SCI	122	
2	PHYSCS 22	11:15AM-12:45PM	.....F.	SCI	157	

Evaluation File Documents	**Person Responsible**	**Due Date**
Classroom Observation Form	Each committee member	End of Week Twelve (11/18)
Conference Report	Each committee member	End of Week Thirteen (11/25)
Professionalism Form	Department Chair	End of Week Twelve (11/18)
Official Course Outlines	Department Chair	End of Week Five*(9/30)
Syllaby	Evaluatee	End of Week Five*(9/30)
Self Evaluation or Plan for Professional Development	Evaluatee	End of Week Eleven* (11/11)
Other materials as requested by the Committee (optional)	Evaluatee	End of Week Eleven*(11/11)
Report of Other Professional and/or College Activities	Evaluatee	End of Week Eleven*(11/11)
Student Evaluation	HR	Spring semester

Evaluation events	**Person Responsible**	**Due Date**
Preliminary Meeting of Committee	All committee members	End of Week Four (9/23)

Preliminary Meeting with Evaluatee	Everyone	End of Week Five (9/30)
Deadline for completing Classroom Observations	Each committee member	End of Week Twelve (11/18)
Deadline for completing Conference with Evaluatee	Each committee member	End of Week Thirteen (11/25)
Deadline for submitting forms to Committee Chair	Each committee member	End of Week Fifteen (12/9)
Deadline for final review and discussion meeting	Everyone	End of Week Sixteen (12/16)

ARTICLE 7A : EVALUATION OF PROBATIONARY FACULTY

The purpose of faculty evaluation is to improve the performance of each faculty member. The faculty evaluation process is designed to transcend legal compliance and to foster meaningful professional growth. Since every professional educator has certain areas in which the improvement of performance is possible, the faculty evaluation process is structured to help each faculty member identify relevant areas for performance improvement and develop an appropriate plan to accomplish the professional growth.

Procedure for Evaluating Probationary

Santa Monica College will utilize a four-year tenure track process, described below, for probationary faculty. This process will ensure that the College faculty sustains its outstanding record of achievement and promotes academic excellence. In evaluating probationary faculty, Santa Monica College expects all faculty members to meet the following specific standards in the performance of their duties (§87664):

- Provide effective instruction, counseling, library or other student services
- Observe all state, local, and College laws, regulations, and policies and District contractual obligations
- Participate in professional and College activities
- Maintain and improve professional and subject matter competency

This process is designed to accomplish the following goals in each of the four years:

Year One: Validate the initial hiring decision, evaluate the probationary faculty member's performance, and establish a Plan for Professional Development.

Year Two: Evaluate the probationary faculty member's performance; implement, evaluate, and revise the Plan for Professional Development.

Year Three: Evaluate the probationary faculty member's performance; implement and evaluate the revised Plan for Professional Development.

Year Four: Evaluate total performance and consider recommending tenure.

These goals are described in greater detail below.

Tenure evaluation procedures at Santa Monica College are collectively bargained pursuant to Section 3543 of the Government Code.

I. YEAR ONE (First Contract)

A. The Evaluation Committee

A joint faculty-administrative committee will evaluate all first-year probationary faculty. A faculty member with online teaching experience will be included on the committee of an Evaluatee whose

assignment includes an online component. For the purposes of this article, an online component means a hybrid or online assignment as defined in article 6.7. The members of the committee will be:

1. The senior administrator of Human Resources or designee, who will chair the Evaluation Committee, maintain the Evaluation File (below), and record the minutes, decisions, and recommendations from all Evaluation Committee meetings.

2. The chair or faculty leader of the department to which the Evaluatee is assigned. With the concurrence of the department, the department chair or faculty leader may designate another tenured faculty member from the department to serve on the committee instead of the chair, provided that the designee possesses the minimum qualifications or equivalent qualifications of the position for which the probationary faculty member is being evaluated.

3. Another tenured faculty member selected by the department chair or faculty leader and the senior administrator of Human Resources or designee possessing the minimum qualifications or equivalent qualifications of the position for which the probationary faculty member is being evaluated. In the event that the department lacks this additional personnel, the additional faculty member will be selected from among all tenured faculty members in a related department.

4. A faculty peer from a different department. The outside faculty member will be selected from among all tenured faculty members by the senior administrator for Human Resources or designee after consultation with the president of the Academic Senate and the department chair or faculty leader or designee.

Human Resources will provide all Evaluation Committee members with an orientation to the College's evaluation procedures prior to their service on the committee. Committee members must attend all committee meetings and fulfill their responsibilities faithfully. The College will provide substitutes for faculty members who are unable to meet their classes or deliver student services because of duties required by this article. The senior administrator for Human Resources, after consultation with the president of the Academic Senate, may discharge from the committee any member who fails to perform his/her duties. Should a change in employment status make a faculty member unable to serve as a faculty representative, he/she may continue on the committee with the written agreement of the Evaluatee and the president of the Faculty Association or designee. Should a vacancy on the Evaluation Committee occur for any other reason, the committee chair will fill the vacancy within five business days using the guidelines specified above.

All decisions and recommendations of the Evaluation Committee require the affirmative vote of three members, except for a Recommendation to Employ the Probationary Employee as a Tenured Employee for all Subsequent Academic Years or a Recommendation to Not Enter into a Contract for the Following Academic Year, which require the affirmative vote of four members. If the Evaluation Committee is unable to make a decision or recommendation, the Superintendent/President and the president of the Academic Senate will confer and make the decision or recommendation.

B. The Evaluation File

The Evaluation File will contain all materials used by the committee to make its decisions and recommendations. The Evaluation File will include the following:

1. Reports of Classroom or Service Observations

Each member of the Evaluation Committee will conduct one or more classroom and/or service observations before the end of the twelfth week of the Evaluatee's first Fall Semester. For a faculty member whose assignment includes an online component, both the on-ground and online components shall be evaluated.

2. Professionalism Form

The department chair, faculty leader, or designee will complete the Professionalism Form before the end of the twelfth week of the Evaluatee's first Fall Semester.

3. Reports of Conferences between the Evaluatee and Members of the Evaluation Committee

Each Evaluation Committee member will complete a Faculty Observation Form by the end of Week Twelve. Each evaluator will hold a conference with the Evaluatee by the end of Week Thirteen to review the observation and discuss plans for Professional Development, if appropriate. A copy of the Faculty Observation Form will be made available to the Evaluatee at least 24 hours before this conference. The department chair, faculty leader, or designee will also use this conference with the Evaluatee to share feedback from the completed Professionalism Form. A copy of the Professionalism Form will be made available to the Evaluatee at least 24 hours before this conference. Within ten working days of this conference, the Evaluatee may submit a written response to the evaluation. The written response shall be placed in the Evaluation File.

4. Reports of Other Professional or College Activities

The Evaluatee may submit to the Evaluation Committee a report of any additional professional activities that the Evaluatee wishes to include in the Evaluation File. Such activities may include shared governance participation, faculty representation, research, publications, student mentoring, or community service activities.

5. Student Evaluations

Student evaluations shall take place during the third quarter of each course section assigned to a faculty member being evaluated. A summary report of the student responses to the Instructor Evaluation Form will be made available to the faculty member, department chairs or faculty coordinator, and appropriate academic administrators before the end of the fourteenth week of the semester. This timeline will be proportionally adjusted for assignments shorter than 16 weeks. The summary report will be placed in the Evaluation File along with any other student evaluations selected by the Evaluatee. The envelope

containing the Evaluation Comment Forms will be returned unopened to the faculty member after the final grades are submitted. Neither the student evaluation forms nor the summary report shall be placed in the faculty member's personnel file unless requested by the faculty member. An online evaluation tool may be used.

6. Syllabi

The Evaluatee will supply for the Evaluation File the syllabi for all the classes being taught by the Evaluatee.

7. Official Course Outlines of Record

The department chair or designee will supply for the Evaluation File all the official course outlines of record for the courses being taught by the Evaluatee.

8. Self-evaluation

The Self-evaluation may include but need not be limited to the following materials:

a. A description of professional growth activities in which the faculty member has been involved.

b. Plans for improving the faculty member's effectiveness. Such plans may be based on:

1. Self-assessment of teaching methods and/or delivery of services to students
2. Review of curriculum and course content
3. Student and peer evaluations
4. Review of the faculty member's relationships with students and colleagues
5. Self-evaluation of the current level of knowledge and skills required for the assignment
6. Student achievement and retention; and,
7. Other relevant factors suggested by the Evaluation Committee

9. Other Materials

The Evaluation Committee will clearly describe in writing any other materials it decides are relevant and necessary for a complete, effective, and fair evaluation. The Evaluation Committee will provide the Evaluatee at least two weeks to assemble those materials for which the Evaluatee is responsible.

The Evaluation Committee will rely solely on materials contained in the Evaluation File to make its decisions and recommendations concerning the Evaluatee.

The first-year Evaluation File will be maintained intact by the senior administrator for Human Resources or designee for a period of no less than five years.

C. The Evaluation Process

Each of the following procedures and/or meetings will be completed no later than the time specified below for probationary faculty whose first semester of employment begins with Fall Semester. If a

faculty member's service as a probationary faculty member begins during the Spring Semester, his or her service during that academic year does not count as his or her first contract year for the purposes of tenure review. He or she shall receive a first-year evaluation during the following Fall Semester (§ 87605).

Fall Semester:

1. End of Week Four: The Evaluation Committee Chair will convene the committee and determine that all members have received appropriate orientation. At its first meeting, the Evaluation Committee will review the timetable and procedures for the evaluation. The Evaluation Committee will also decide what, if any, other materials beyond those specified for inclusion in the Evaluation File are relevant and necessary for a complete, effective, and fair evaluation and should therefore be included in the Evaluation File. At this meeting the Evaluation Committee will also decide whether each observation will be announced or unannounced.

2. End of Week Five: The Evaluation Committee or Committee Chair will meet with the Evaluatee to describe the Evaluation Process, disclose the membership of the Evaluation Committee, disclose which observations will be announced and which will be unannounced, and notify the Evaluatee in writing of the other materials, noted above in section I.B. 9 of this article, that will be included in the Evaluation File. The Evaluation Committee shall inform the Evaluatee of the need to provide access to online courses, if applicable.

3. End of Week Twelve: Deadline for completing Classroom or Service Observations.

4. End of Week Thirteen: Deadline for completing each conference with the Evaluatee.

5. End of Week Fifteen: The Evaluation Committee members and Evaluatee will complete and submit all the Evaluation File materials to the chair of the Evaluation Committee.

6. End of Week Sixteen: The Evaluation Committee will meet to review all materials in the Evaluation File and to determine the overall rating as well as the recommendation of the Evaluation Committee. The Evaluation Committee will meet with the Evaluatee and review all materials in the Evaluation File.

   The committee chair will prepare and the Evaluation Committee members and Evaluatee will sign the First Contract Year Statement of Faculty Evaluation Summary Form for Probationary Faculty, which will state the overall rating as well as all reasons for the recommendation of the Evaluation Committee. The Evaluation Committee will recommend one of the following (§87608):

   - Not Enter into a Contract for the Following Academic Year
   - Enter into a Contract for the Following Academic Year
   - Employ the Probationary Employee as a Tenured Employee for all Subsequent Academic Years

Spring Semester:

For the purpose of this article the week of spring break shall not be counted as a week in the timeline.

1. End of Week One: The Evaluatee may submit a written response to the overall rating of the fall Evaluation Committee to be placed in his or her Evaluation File. The Evaluatee may appeal the recommendation of the Evaluation Committee by submitting a written request and statement of reasons to the Superintendent/President.

2. End of Week Three: The Superintendent/President will review the recommendation of the Evaluation Committee. The Superintendent/President may decline to accept the recommendation of the Evaluation Committee after consultation with the president of the Academic Senate. The Superintendent/President will also review any appeals submitted by the Evaluatee and, after consultation with the president of the Academic Senate, render a determination and recommendation on the appeal. The Superintendent/President will make a recommendation to the Board of Trustees, including his or her rationale and the Faculty Evaluation Summary Form.

In the event the District will not enter into a contract for the following year, the senior administrator for Human Resources will give written notice of the District's decision and the rationale to the Evaluatee on or before March 15 of the academic year covered by the First Contract. The notice will be sent by registered or certified mail to the most recent address on file with the Human Resources office. Failure to give notice as required to the Evaluatee will result in the issuing of a Second Year Contract for Year Two of Probationary Employment (§87610(a)).

3. End of Week Seven: If awarded a Second Contract, the Evaluatee will meet with the Evaluation Committee, which will review the materials in the Evaluation File and suggest goals and objectives that the Evaluatee might wish to include in the Plan of Professional Development. The Evaluation Committee may decide to conduct additional observations and will inform the Evaluatee of its decision.

4. End of Week Twelve: Taking into account the Evaluation Committee's suggestions, the Evaluatee will submit a Plan of Professional Development to the chair of the Evaluation Committee. This Plan will be included in the Evaluation File and constitute one basis for the faculty member's second year evaluation.

II. YEAR TWO (Second Contract)

A. The Evaluation Committee

The Evaluation Committee for the second-year probationary faculty member will be the same as that for the first year. The Evaluation Committee Chair will convene committee meetings and maintain the Evaluation File and Evaluation Committee minutes. Should a vacancy occur on the committee for any reason, the Committee Chair will fill the vacancy using the procedure described in section I.A. above no later than the third week of the second Fall Semester of employment.

All decisions and recommendations of the Evaluation Committee require the affirmative vote of three members, except for a Recommendation to Employ the Probationary Employee as a Tenured Employee for all Subsequent Academic Years or a Recommendation to Not Enter into a Contract for the Following