SANTA MONICA COMMUNITY COLLEGE DISTRICT
Faculty Evaluation Summary Form for Probationary Faculty
Year Three

NAME:	DEPARTMENT:
Kevin Roberts	Physical Sciences

OVERALL RATING

- ○ Satisfactory
- ● Needs Improvement
- ○ Unsatisfactory

Signature	Date
Dept. Peer: FOROUZAN FARIDIAN (Dec 17, 2024 16:33 PST)	Dec 17, 2024
Dept. Peer: Emin Menachekanian (Dec 17, 2024 16:38 PST)	Dec 17, 2024
Dept. Chair, faculty leader, or designee:	Dec 17, 2024
Evaluatee: Kevin F Roberts	Dec 17, 2024

Faculty member's signature does not necessarily imply agreement. It is merely an acknowledgement that the complete report has been read and a copy received.
Comments: (optional)

Please see recommendations and commendations on the next page.

Commendations & Recommendations

Kevin Roberts | Fall 2024

This Fall the committee recognized Kevin's commitment to being a student-centered educator. We always see him in the workroom or his office answering student questions. In the classroom, he knows everyone's names and he welcomes every question. It is obvious that he cares so much for his students.

In Spring 2024, committee members noted during informal classroom visits that Kevin had made a lot of progress towards updating his lecture slides that enabled Kevin to stay on topic and eliminate the need to sketch elaborate diagrams on the whiteboard. In short, Kevin had made significant progress from Fall 2023.

In Fall 2024, each of the three committee members visited Kevin's class on different Fridays. Each time visiting a lab. There was consistency in the observations – the prelab lectures were disorganized and did not cover the key elements that a good prelab lecture should cover. Class time was not used effectively. The prelab lectures were long and encroached on the time students should use for setting up the experiment and collecting data. During one observation, the committee member noted that lab ended, the students left their materials behind, and Kevin was left to clean up after them. To address the concerns related to lab meetings, the committee recommends that Kevin take the following actions:

A. Observe other instructors teaching the same classes. Both Forouzan Faridian and Emin Menachekanian welcomed Kevin to observe their classes.
B. Create clear lesson plans that set objectives for what should be covered during each class meeting.
C. If Kevin plans to continue with using Excel to analyze data, Kevin should create handouts outlining the format of the spreadsheet or provide a blank template.

After reviewing Kevin's Canvas shell, the committee learned that Kevin had assigned over 70+ assignments to the student for the semester. At week 12, nearly all these assignments were ungraded. These assignments included online/auto-graded homework assignments, written-work supporting the homework, lab reports, group work, note taking assignments, and exams. When the committee asked Kevin why so many assignments were ungraded so late into the semester, he said that he became overwhelmed by everything – too many assignments and too many outside commitments including substituting for another instructor for 3+ weeks. The committee recommends that Kevin take the following actions:

A. Limit the number of outside commitments until you get a better handle on instructional responsibilities. As a full-time instructor your #1 priority is to your students. If you cannot honor the commitment to your students, you are not fulfilling your job.
B. Prioritize grading exams above all other assignments. Exams carry the most weight and provide necessary feedback to students.
C. Get back to the basics with assignments. Kevin should assign labs, homework, and exams. All other assignments should be removed while Kevin focuses on getting the timing right for grading the non-negotiable assignments: exams and labs.

Given the limited amount of time remaining for Kevin's probationary period, the committee has agreed to formally evaluate Kevin again in Spring 2025. Each member of the committee will conduct at least one unannounced classroom visit in the Spring semester. The committee expects that Kevin will make progress addressing each of the recommendations listed in this document and will be looking for improvement.

The committee commends the care Kevin shows for his students and recognizes the time he has given to the department by serving as a substitute when another instructor went on medical leave, by serving as the Curriculum Committee representative, by exploring the requirements for the Physics Associates for Transfer Degree, and by mentoring some of the new faculty. The committee encourages Kevin to be mindful of his time and acknowledge when he has taken on too much. It's very reasonable to reach out to the committee or other faculty in the department to ask for support.

FACULTY OBSERVATION FORM

Evaluation of: Kevin Roberts Semester: Fall 2024

Department: Physical Sciences

Evaluator: Forouzan Faridian Position: Associate Professor of Physics

Knowledge, Skill and Ability as an Instructional Faculty Member	Satisfactory or Better	Needs Improvement	Unsatisfactory	Not Observed (NO) Not Applicable (NA)
1. Establishes a student-instructor relationship conducive to learning	●	○	○	○
Comments: In the classes I observed, students were engaged. Be it in a lab, or a guided exercise in how to use Excel, the students were focused. The language used in the syllabus also reflects professor Roberts' care for his students' well-being and success.				
2. Communicates ideas clearly and effectively	●	○	○	○
Comments: Professor Roberts' knowledge is evident. In the observed class, professor. Roberts used the projected screen of the excel program on his computer to model how to input formulas in excel. As it can be hard to see the screen from all angles, a written guideline for students to follow could be helpful.				
3. Stimulates students' interest and desire to learn	●	○	○	○
Comments:				
4. Promotes active involvement of students in learning activities	●	○	○	○
Comments: Professor Roberts involved students during his demonstration of the lab activity. Students felt free to ask *questions.*				
5. Demonstrates sensitivity in working with students from diverse backgrounds and with different needs	●	○	○	○
Comments: Language in the syllabus seems very welcoming.				
6. Employs appropriate pedagogy	●	○	○	○
Comments:				
7. Begins class promptly and ends at time designated on schedule of classes	●	○	○	○
Comments:				
8. Uses class time efficiently	●	○	○	○
Comments: The class observed was a lab session. Over an hour was spent on the explanation of how to use Excel and enter each data value. A written guide for Excel could be helpful, and giving students more autonomy in creating groups can also be more efficient, ultimately giving students more time to perform the experiment.				

9. Maintains an appropriate pace during class session	○	◉	○	○
Comments: In one of the lab classes I observed, the time given for lab was not enough to include students cleaning up. After the class, Professor Roberts was left cleaning and putting all the lab equipment away. Learning to clean-up after a lab is a skill that students need to learn, and pacing the class more appropriately can help.				
10. Provides students with a syllabus which includes a written explanation of the evaluation process, expectations and requirements, assignments, course content, relevant dates, and other information	◉	○	○	○
Comments: The Syllabus is well organized and clear.				
11. Teaches course content that is consistent with the official course outline of record	◉	○	○	○
Comments:				
12. Uses materials pertinent to the course content	◉	○	○	○
Comments: I have observed Professor Roberts bringing in extra demos to clarify concepts for students.				
13. Teaches at a level that is appropriate to the course content	◉	○	○	○
Comments:				
14. Has appropriate command of the subject matter to be able to respond to students' needs	◉	○	○	○
Comments: Professor Roberts is knowledgeable in the subject matter and adds good examples that are interesting to the students.				
15. Assesses students' progress regularly	○	◉	○	○
Comments: Even though there are only a few weeks left in the course, the only grades visible on the Canvas shell are that of the online homework. The grades for the labs and exams are not visible.				

Additional comment:

Professor Roberts' level of care for his students is evident through his syllabus, his desire to bring interesting examples and demos to his class, and his desire to engage students. There is room for improvement in pacing the course and giving more time for students to actually perform labs and clean up. This will give professor Roberts to also take a short break between classes and have time to reflect and prepare. The syllabus is very clear in how the grades are awarded, however there seems to be a lack of grades entered for labs and exams at the time of this evaluation (week12). Other than these, it is evident that professor Roberts is passionate about the subject matter and really cares about student learning and success.

Date(s) of Visit: 10/11/24

Length of visit: 90 minutes Course (if applicable): Physics 23/Physics 21

Conference Date: 11/21/24

Evaluator's Signature: [signature]

Evaluatee's Signature: Kevin Gratton Roberts

Faculty member's signature does not necessarily imply agreement. It is merely an acknowledgement that the complete report has been read and a copy received.

Probationary Faculty Classroom Observation details
Kevin Roberts Fall 2024 By Forouzan Faridian

I had the opportunity to observe Professor Roberts classes on October 11, 2024. I observed the tail end of Physics 23 where students were performing a lab on Thermal expansion, and the first hour of Physics 21, where the students were to perform a lab on forces in circular motion.

Physics 23 observations:
Students were in small size groups (3-4 in each group). The lab room is arranged for 7 lab groups, but as there were more students in the class than 28, there were lab groups using the lecture bench and even a group using the middle chair areas. This particular lab involves boiling water on hot plates, in containers attached to plastic tubing, handling hot metallic rods, and setting up the experiment in a fashion that takes a linear distance of over 1.5 m and room on the lab benches to leave the hot rods. With these constraints, not having enough space for labs creates a dangerous situation.

There was an SI leader in the class who was acting as a TA but seemed to be under the impression that he was supposed to be teaching and he seemed to be making the situation worse.

In order to deal with the problem of dealing with the hot rods and bringing back their temperature, professor Roberts had come up with the idea of bringing a bucket of ice water for students to drop the rods in. With the large number of students and the scale of the items in the experiment, this led to a bit of a chaotic situation with fluid on the floor. Time was spent dealing with this situation. By the end of the class, the materials were all over and not picked up, and professor Roberts used the 15 minutes he had before his next class to clean up the lab and then go directly to the next class.

Possible growth areas and suggestions related to this class:

1. Over-enrolment of students:

    Professor Roberts clearly cares for his students. Many students at SMC are there on their way to transfer to a UC or other 4-year university, and at the same time they are experiencing dire financial issues. This combined with the fact that we are limited in the number of lab science classes we can offer due to lab space issues, creates a situation where we can not serve all the students who need to take our courses. Professor Roberts clearly wanted to help students by over-enrolling, adding extra students to the class to accommodate them.

    - Suggestion: Safety first. Limiting the number of over-enrolled students to 4, so as to use the portion of the instructor bench for a lab, or to regroup students in groups of 4 with a few groups of 5. This at least diminishes the safety issue of

some students having to use the single table/chairs set-up of the middle of the class.

2. SI leader responsibilities and attitude:

   Professor Roberts clearly shows kindness and understanding in dealing with his SI leader who seems to be on the Autism spectrum. The SI leader was loud and was asking questions and seemed to be wanting to answer students with some disregard towards the instructor.

   - Suggestion: The scope of the work of the SI leader is to create time outside of class to reinforce the concepts. The SI leader is not a TA or lab assistant, and has no role during the lab. Even in the lecture classroom if the TA is over-zealous as he sees that as his role, professor Roberts can have a private conversation with him clarifying the role more clearly, and creating a boundary for the future in class interactions for example by stating that he appreciates the questions, but asking him for help allowing others to be able to express their questions as this will be beneficial to the students that the SI leader is trying to help.

3. Time management

   In the class observed, there was clearly not enough time to perform the experiment. Lab days should be devoted to students performing the lab, with a short introduction of material and lab procedures at the beginning by the professor.

   - Suggestion: Limit the introductory part of the lab to 15-20 minutes. Allow the students to discover the material and perform the experiment. Limit things that can take away from the time, such as the professor re-organizing the groups each time. Giving more autonomy to the students can actually be very helpful.

4. Skills needed by students

   In the class observed, students did not clean up after themselves. This could have happened because they ran out of time, or because they were not expected to clean up. Managing their time to set-up and clean up is an essential lab skill that students need to acquire in the classroom. Professor Roberts took time from his own very short break to clan up the room and leave it ready for the next class.

   - Suggestion: By managing time better at the beginning of the lab, both professor Roberts and his students can use their well needed break time between classes. Also it would be helpful for Professor Roberts to instruct students to return the

materials to the carts as they found them, by asking each group to have one or two students in charge of acquiring and replacing the lab material each time.

Physics 21 observations:

Next I observed one hour of Physics 21. Professor Roberts started the class at 12:30 PM. There were 17 students present in the class. A few students walked in late. Professor Roberts passed the lab papers around, and proceeded to explain the lab by setting the experiment up on the instructor bench, drawing diagrams on the board to explain the parts, and walking students to the step by step creation of a lab spreadsheet on excel while actually performing the experiment himself and taking live data to show how it is done and what to put in excel. This took one hour. Then Professor Roberts proceeded to create randomized groups, which resulted in 2 groups of 4 and 6 groups of 3, with the 8th group having to use the professor's bench. The process of creating the groups took 7 minutes.

Possible growth areas and suggestions related to this class:

1. Skills needed by students
    a. Excel: Professor Roberts has added the use of excel to this lab that did not traditionally include it. Using Excel as a tool to record, manage and analyze data is a very useful skill for students to acquire. The amount of time and manner in which this was done can use some reflection and adjustment.

    - Suggestion: Providing the students with a written guide on how to use excel to set up the spreadsheet ahead of time or even during the lab can be very helpful. This will give the students to do it themselves and learn the skills, and have a reference for future times to refer back to.

    b. Ability to perform a lab from start to end: Professor Roberts actually performed the entire lab in front of the students to model for them.

    - Suggestion: Even though modeling can be a great tool, this could take away from the students ' sense of discovery and creativity. Professor Roberts can use the experiment paper he provided the students with to note any suggestions he has, and limit his modeling to a quick explanation and a quick set-up left in the front as a model. Both setting up and taking down experiments are skills important to be learned by students.

2. Efficient use of class time:
    a. Lab explanation: Professor Roberts clearly knew the subject and the lab experiment, however, as Professor Roberts did not have any break for many hours before starting his class, the explanation ran long and inefficiently.

- Suggestion: It is important to have a mental presence for each class. Both students and teachers need the break time . This would provide professor Roberts the time to gather his thoughts and have a more concise explanation of the lab.

b. Setting up lab groups by professor: The time taken to recreate lab groups from scratch every time took away some precious lab time.

- Suggestion: Giving more autonomy to the students can both save time and create more bonds amongst them.

I discussed these observations with Professor Kevin Roberts in a phone call after his office hours on the following Monday via a phone call.

Other aspects of the evaluation were expressed on the Faculty observation form shared with Professor Roberts on November 21, 2024.

Overall impression:

In addition to having observed professor Roberts formally as mentioned above, I have had the opportunity to observe first-hand how professor Roberts cares for his students, for the subject and for the department. During the pandemic, Professor Roberts volunteered to come in and help me on a couple of occasions to videotape labs to be used for students in our classes. At the time, professor Roberts was an adjunct faculty. I have also observed Professor Roberts find a use for equipment left in the stockroom that we no longer use to created demonstrations or labs in the field of Thermodynamics. Professor Roberts took part in the Equitizing Gateway Courses initiative of the college in the first cohort, and uses skills acquired in that frame with his students.
Professor Roberts also went above and beyond in helping the department this term while we were facing an unusual situation of having a few faculty members deal with major health issues. Professor Roberts also represents the department in the Curriculum Committee of the Senate, and he is also spearheading the creation of student certificates for the department.

In all, I believe Professor Roberts is a caring, dedicated, passionate and hard-working instructor who clearly cares for his students and the field of Physics. I believe there is room to grow in the areas of time-management, preparation for class and pedagogical approaches that can be obtained by observing other classrooms, and participating in professional development activities.

FACULTY OBSERVATION FORM

Evaluation of: Kevin Roberts Semester: Fall 2024

Department: Physical Science

Evaluator: Jennifer Hsieh Position: Department Chair

Knowledge, Skill and Ability as an Instructional Faculty Member	Satisfactory or Better	Needs Improvement	Unsatisfactory	Not Observed (NO) Not Applicable (NA)
1. Establishes a student-instructor relationship conducive to learning	●	○	○	○
Comments:				
2. Communicates ideas clearly and effectively	●	○	○	○
Comments:				
3. Stimulates students' interest and desire to learn	●	○	○	○
Comments:				
4. Promotes active involvement of students in learning activities	○	●	○	○
Comments: Please see attached comments. The only person asking questions was his SI leader. Many students were checked out working on things on their laptops or using their phones.				
5. Demonstrates sensitivity in working with students from diverse backgrounds and with different needs	●	○	○	○
Comments:				
6. Employs appropriate pedagogy	○	●	○	○
Comments: Lecture was disorganized, the lab has shifted to include a lot of handholding.				
7. Begins class promptly and ends at time designated on schedule of classes	●	○	○	○
Comments: Timing was much better. Students were wrapping up by the end of class, where no one felt compelled to stay late.				
8. Uses class time efficiently	○	●	○	○
Comments: Spent way too much time on explaining the micrometer and building a spreadsheet. The spreadsheet should have been planned out ahead of time.				

9. Maintains an appropriate pace during class session	○	●	○	○
Comments: Again, spent way too much time on certain aspects of the prelab lecture and ran out of time to allow students time to collect data in triplicate.				
10. Provides students with a syllabus which includes a written explanation of the evaluation process, expectations and requirements, assignments, course content, relevant dates, and other information	●	○	○	○
Comments:				
11. Teaches course content that is consistent with the official course outline of record	●	○	○	○
Comments:				
12. Uses materials pertinent to the course content	●	○	○	○
Comments:				
13. Teaches at a level that is appropriate to the course content	●	○	○	○
Comments:				
14. Has appropriate command of the subject matter to be able to respond to students' needs	●	○	○	○
Comments:				
15. Assesses students' progress regularly	○	●	○	○
Comments: While Kevin has regularly scheduled exams, I noted that there are no grades in his gradebook for Exam or Exam 2, which were given in September and October respectively. It is important to not only assess them via exams, itis important to provide feedback by returning exams and scores within a timely manner (1-2 weeks).				
Additional comment: Please see additional comments attached.				

Date(s) of Visit: October 11, 2024

Length of visit: 2.5 hrs Course (if applicable): Physics 23

Conference Date: 11/19/2024

Evaluator's Signature: J M Haier

Evaluatee's Signature: Kevin F Roberts

Faculty member's signature does not necessarily imply agreement. It is merely an acknowledgement that the complete report has been read and a copy received.

Observation Notes

Evaluation of Kevin Roberts

Fall 2024

Physics 23 – October 11, 9:50 am – 12:15 pm

I visited Kevin's Physics 23 class on Friday, October 11th. My purpose for attending this meeting was to observe Kevin's interactions with the students while they completed a lab. The class is scheduled 9:15 am – 12:15 pm. It is worth noting that prior to class Kevin sent out a Canvas message to the class saying that if they were late, they would not be able to participate in the lab. When I joined, 35 minutes into class, there were approximately 17 students present. Kevin was giving a prelab to explain how to complete the thermal expansion lab.

Kevin was explaining how to use the micrometer. He had a simulation of the micrometer that was projected on the screen, and was holding an actual device in his hand. He was trying to teach the students using the device in his hand, but it was so small that no one could see what he was doing. At least not from where I was sitting, I couldn't see anything. There also appeared to be an issue with the device not being calibrated correctly, so Kevin spent considerable time talking about checking the zero offset and needing to subtract this value from each measurement. Eventually, he switched to demonstrating the micrometer using the projector with the simulated dials. The simulation was much more effective. Overall, Kevin spent 20+ minutes explaining how to use the micrometer and unnecessarily fiddling with it to figure out the zero offset. While I don't use micrometers, I feel like the demonstration could have been done in about five minutes.

After explaining the micrometer, Kevin began to show the set up for the lab. However, Kevin went beyond just the setup to actually complete the experiment with the hotplate and had the front row observe the thermal expansion of the metal rod. It's fine to show the set-up, but there is no need to demonstrate the experiment to the students. The point of a lab is for the students to experience the lab, otherwise this activity could simply be a demonstration.

After demonstrating the experiment, Kevin worked through the equations the students would need for the lab. At this point I noted that it felt like he was reading the procedure to them as if it was the first time he has done the experiment. This seems odd to me, as he has taught Physics 23 four other times at SMC. Throughout the discussion of setting up the equations, the only person that asked questions was Felix, who I learned later was the Supplemental Instruction leader. Kevin went on to explain that this lab would be used to make a full, 4-page report and walked them through setting up the Excel file. Kevin spent an inordinate amount of time creating the Excel file in front of the students and writing all the scripts to calculate the final values in each row of the spreadsheet. Most students photographed the scripts for the formulas. I have two concerns with this part of the lab. First, it felt like Kevin was adlibbing the excel spreadsheet and spent way too much time on it. If he has a preferred format for the spreadsheet, type out the format ahead of time and make a handout. Second, if Kevin writes the script to do all the calculations and allows the students to photograph that script then what exactly is the student responsible for calculating on their own? With this much handholding, they literally have no

work to do for the data analysis part of the lab. At this level of their education, the students should be writing their own scripts. Anything short of this is doing the students a disservice.

Kevin told the students to complete triplicate measurements for each metal assigned. He allowed them to start their lab after talking to them for about 1.5+ hours. By 11:35 am, Kevin realized that students were not going to be able to collect triplicate data and told them all to pivot to collect one trial for each metal because they were running late.

Overall, it remains clear to me that Kevin is passionate about physics and cares a lot about his students. However, there are glaring, and in some cases, recurring issues in the way that Kevin manages his courses.

1. **Time management** – Last year, Fall 2023, I noted that Kevin gave a 3 - 5 minute prelab that left the students lacking any guidance on how to do the experiment and ~35 minutes to collect data. This left the students frantically rushing to finish the lab. This year, he gave a disorganized, excessively long prelab that appears to developed on the fly, rather than carefully thought out ahead of time. This still left the students crunched for time. During the prelab lecture, Kevin became so distracted by the micrometer and recording all the numeric values on the board, that many of the students lost interest. I watched as one student read a college brochure and many others opened their laptops or checked their phones. One student even put on his over the ear headphones to listen to something in the middle of Kevin's lecture.
2. **Disorganized lectures** – Last year, Fall 2023, I noted that Kevin's lectures needed greater organization and that he would benefit from prepared slides or lecture notes. In response, he created follow along notes in Spring 2024 to share with his students. I observed his class in Spring 2024 and I felt that the added structure from the follow along notes was transformative in keeping him on track and on schedule. The committee, as a whole, noted a marked improvement. When I sat through the Fall 2024 prelab lecture I was frustrated to find that Kevin did not extend the success of using prepared follow-along notes into his prelab lectures. He reverted back to giving a "chalk-talk" style lecture on the white board and he appeared to be reading off the procedure handout. After teaching the class four times previously, I'm surprised that he doesn't appear to have a set of lecture notes.
3. **Classroom management** – Kevin is one of the most generous, outgoing people I know. If a student asks for help, he will be right there to support them. However, I think because of how kind he is, students take advantage of the situation. For example, when I arrived 35 minutes into class, approximately 17 students were in attendance. As I noted earlier, he had sent out a message saying that if students were late they would not be able to participate in the lab. During the next hour, while I watched the lecture, more and more students trickled in. I noted that one student arrived at 10:25 am, which is an hour and 10 minutes late! He allowed all latecomers to complete the lab. By not enforcing the boundaries Kevin set in the Canvas message sent out earlier, Kevin is communicating to his students that they don't have to take his classroom policies seriously.
4. **Setting boundaries with the SI leader** – Kevin has a supplemental instructor leader for Physics 23. It is important to note that supplemental instruction leaders are supposed to "shadow" the course and provide support ***outside*** the classroom during their SI sessions. While in the classroom, they are supposed to model good behavior by attending all lecture sessions and taking good notes. The SI leader is ***not*** a TA, the SI leader ***should not*** ask questions pretending to

be a student, and the SI leader ***should not*** ask questions of the students like they are co-teaching the class. It took me awhile to realize that the "student" asking all the questions in class was actually the SI leader, Felix. Once I realized that Felix was the SI leader, it made his interactions with Kevin more problematic. On more than one occasion Felix corrected Kevin and made suggestions about how to present the material or how to fix the micrometers. Some of Felix's questions to Kevin appear to be his attempt to get Kevin to clarify points about his lecture. At one point, Felix turned to the class and asked a question of the class, expecting them to answer him like he was the instructor for the course. Once the data collection started, Felix walked around the lab like a TA. All of the interactions that I observed with Felix were inappropriate to the role of SI and Kevin needs to do a better job setting clear boundaries. Additionally, I have had several SI leaders in my class and they have never attended lab. I checked with both Forouzan and Emin who have also had SI leaders and both reported that their SI leaders never attend lab. Additionally, I have noted on more than one occasion that Felix is present for Kevin's office hours and will stay in the work room after office hours are over. It is my understanding that SI leaders should hold their office hours (if supported by the SI program) and their SI sessions independent of the instructor. Literally, the instructor is not supposed to know who attends the SI sessions. If Felix drops in for office hours, Kevin also needs to do his part to ask Felix to leave the workroom after office hours are over. In the context of our department, Felix is a student and should not be in the workroom without instructor supervision.

Grade distributions

As department chair, I periodically review the grade distribution data for our department and noticed that Kevin's classes have an unusually large proportion of A's each semester. I calculated the percentage of A's awarded to students in Physics 21, 22, and 23 since we returned to on-ground instruction after the pandemic. This includes Fall 2022 – Spring 2024, as well as the intersessions in between.

	%A (w/o Kevin's classes)	**%A (w/ Kevin's classes)**	**% difference**
Physics 21	34.2%	42.8%	8.6%
Physics 22	20.7%	41.8%	21.1%
Physics 23	50.4%	66.7%	16.3%

*Percentage calculated as (# of A's) / (# of students remaining at the end of semester)

**Does not include withdrawals

Examining these distributions on a semester-by-semester basis, I plotted the percentage of A's awarded in Kevin's classes each semester. The x-axis is labeled using Academic Affairs coding for semesters, the first digit corresponds to the term, the remaining four digits corresponds to the year. For example, 22024, 2 = Summer, and 2024 = the year 2024. 0 = Winter, 1 = Spring, 2 = Summer, and 3 = Fall. Graphs are included below. In all three classes, the percentage of A's awarded in Kevin's class far exceeds those awarded in other classes.

Notably, when I compare the number of students that pass P21, P22, or P23, the percentages are similar. Meaning that most instructors pass approximately the same number of students as Kevin, but there is a broader distribution of letter grades between A's, B's, and C's. Kevin's pass rate is still higher, but it is in closer alignment with the rest of the department.

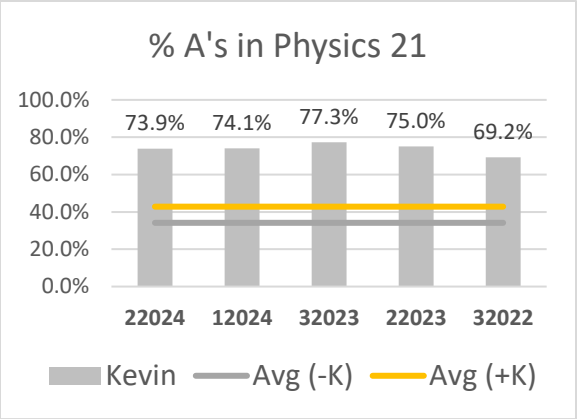

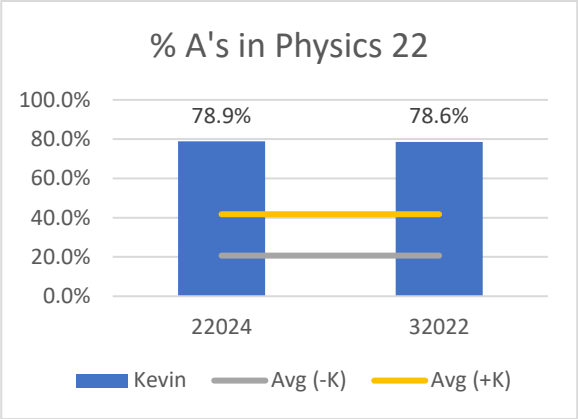

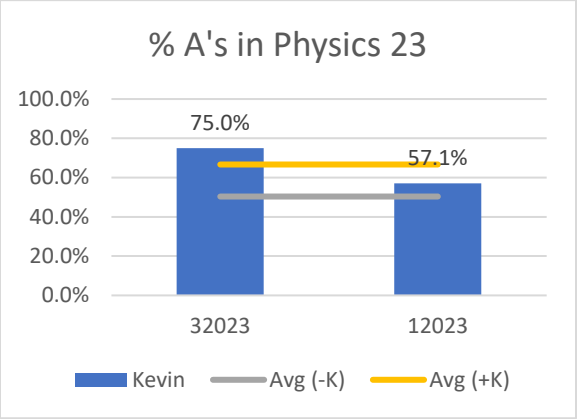

The committee also asked Kevin to provide the exam statistics that correspond with the various sets of exams that the committee requested to review this semester. To summarize the findings, I combined the average of the Exam 1, 2, 3 and Final Exam scores to calculate a composite score.

	Average Points	Percentage
Physics 21, F'23	473/600	78.8%
Physics 23, F'23	449/600	74.8%
Physics 21, Sp'24	488/600	81.3%
Physics 22, Sp'24	515/600	85.8%

The averages on the exam scores also seem unusually high. To put it in perspective, many of my Chem 12 students will take Physics 21 at the same time as Chem 12. I also give three exams, 100 points each, and I have normalized my final exam to three hundred points. For my Spring 2024 class, my average points on exams was 398/600, which works out to a percentage of 66.4%. To be clear, I'm not saying that Kevin's students should average 66%, but I am saying that I am surprised that his average is 14.9% higher. I also wonder how a class can have an overall test average of 74.8%, like Physics 23 in Fall 2023, and end the semester with 75% of students earning an A. Rather than speculate on the explanation, I'd like to discuss this topic with Kevin at our conference.

In the time since I have been with the department, we have pulled grade distribution data twice – once just before I joined in 2010 or 2011 and again just before the pandemic. The grade distributions were calculated for our "bread and butter" courses. On both occasions, the grade distributions were about the same. I will forward the table separately. This table was provided to me by the former chair that hired me. In general, most, if not all, of the classes had a distributions of approximately 25 – 30% of each, A's, B's, and C's. Comparing Kevin's letter grade distributions against this data, it begs the question of why there are so many A's being awarded in Kevin's classes. It also raises a larger concern about how this affects the health of the physics program and the department.

In my time as department chair, I have had many of Kevin's students insist that I open more sections of whatever class Kevin is teaching that they cannot get into. Once I do, the class struggles to fill. I have had several students email explicitly asking me to open another section so that Prof. Roberts can teach it. Additionally, students are so committed to enrolling in Kevin's class that he has given in to the pressure to overenroll well past seat capacity. In fact, both of his Spring 2024 sections were enrolled to ~ 40 students each, when the seat capacity is 28. Kevin and I spoke about this in the Spring term. Over enrollment is not good for students, as the ones that secured their seats through the enrollment process, rather than crashing, are getting less quality time with their instructor and they have to share laboratory equipment meant for 28 students between 40 students. Knowing that Kevin is awarding a disproportionate amount of A's each semester, I cannot help by wonder if this is the reason why students are so adamant that they have to join Kevin's class. Additionally, when one instructor disproportionately awards more A's than other instructors, students feel like they are not being treated fairly. One goal of the department is to ensure that all students will get a fair opportunity to earn an A in any of the same class. In fact, like many of my colleagues, I include the following statement in my syllabus. This statement was developed by the department to address concerns of uneven distribution of letter grades:

> *The faculty of the Physical Science Department at SMC have agreed upon common guidelines to advise us in assigning grades. Our goal is that all sections of a particular course will be assigned similar grade distributions, thus alleviating student concerns that one section might be graded more or less leniently than another. We acknowledge that each group of students is unique, so we anticipate some deviation from these standards from time to time. Instructors are, of course, expected to use their professional judgment in the final assignment of grades.*

I encourage Kevin to think about his current grading and assessment practices to determine what is contributing to his current grade distributions. I look forward to a candid conversation.

Conclusions

Kevin is a caring, student-centered educator. He has gone out of his way to support the department in the past year and especially in the past month. Kevin is currently serving as our curriculum representative on the Curriculum Committee and in Spring semester served as the SLO Ambassador. Kevin has also been supporting our chemistry faculty to develop new career education courses by reviewing their course outlines. He has also been exploring the requirements to add an Associates for Transfer Degree in Physics to our program.

In October Kevin served as the substitute instructor for another Physics 21 course while we interviewed and hired a replacement instructor, as the original instructor had to take a leave of absence. Kevin took a deep dive to figure out what support those students needed and went out of his way to make the new

instructor feel welcome. It is so clear that Kevin cares for his students because I always see him working with students in the workroom or his office.

I am concerned about Kevin's progress towards tenure. This is his third year of probation and at this point, the expectation is that a probationary instructor has received their critiques, incorporated changes to improve their course(s), and by year three the committee finds little to no issues during their visits. I have spoken with each of the committee members, and it is my understanding that we have all observed significant issues that need to be addressed.

Time management and disorganization have been issues from the first semester. In Spring 2024, it appeared as though Kevin had made significant improvements to time management in the classroom and organization to his lecture, but that was not apparent in my visit this Fall. Additionally, new issues around setting boundaries have popped up this Fall. Kevin has not set appropriate boundaries with his SI leader or with students seeking to add his class beyond capacity. This Fall, three weeks into the semester, Kevin brought 1 or 2 students into my office so that ***I*** could tell them that ***he*** could not add more students to his class because he was already overenrolled and I had said no. If Kevin sets his own boundaries and maintains them, there should be no need for him to bring students in for me to tell them no. No other faculty member in the department needs me to tell their crashers they cannot have an add code.

Finally, the grade distributions in Kevin's class are troubling. Again, I am not going to speculate on why there are so many A's being awarded, but it is a serious conversation that we need to have with Kevin as a committee.

FACULTY OBSERVATION FORM

Evaluation of: Kevin Roberts Semester: Fall 2024

Department: Physical Sciences

Evaluator: Emin Menachekanian Position: Professor of Physics

Knowledge, Skill and Ability as an Instructional Faculty Member	Satisfactory or Better	Needs Improvement	Unsatisfactory	Not Observed (NO) Not Applicable (NA)
1. Establishes a student-instructor relationship conducive to learning	●	○	○	○
Comments:				
2. Communicates ideas clearly and effectively	●	○	○	○
Comments:				
3. Stimulates students' interest and desire to learn	●	○	○	○
Comments:				
4. Promotes active involvement of students in learning activities	●	○	○	○
Comments:				
5. Demonstrates sensitivity in working with students from diverse backgrounds and with different needs	●	○	○	○
Comments:				
6. Employs appropriate pedagogy	●	○	○	○
Comments:				
7. Begins class promptly and ends at time designated on schedule of classes	○	○	○	●
Comments: For the single observation adminstered, the class did start on time, but because the observation did not last until the very end of class, I cannot comment on the ending time.				
8. Uses class time efficiently	○	●	○	○
Comments: Details are provided within the narrative, mainly concerning aspects of the pre-lab lecture.				

9. Maintains an appropriate pace during class session	●	○	○	○
Comments:				
10. Provides students with a syllabus which includes a written explanation of the evaluation process, expectations and requirements, assignments, course content, relevant dates, and other information	○	●	○	○
Comments: There are some aspects of the syllabus that are unclear. This is described a bit in the attached narrative.				
11. Teaches course content that is consistent with the official course outline of record	●	○	○	○
Comments:				
12. Uses materials pertinent to the course content	●	○	○	○
Comments:				
13. Teaches at a level that is appropriate to the course content	●	○	○	○
Comments:				
14. Has appropriate command of the subject matter to be able to respond to students' needs	●	○	○	○
Comments:				
15. Assesses students' progress regularly	○	●	○	○
Comments: Please see the narrative regarding issues concerning the large volume of assignments being requested of the students, and the corresponding lack of grading, particularly of the high-stakes items (e.g., exams).				

Additional comment:

Please see the attached narrative for further details regarding the rationale behind the way this form was filled out based on the class observation, as well as a review of other aspects of the courses being taught.

Date(s) of Visit: 10/25/2024

Length of visit: 85 minutes Course (if applicable): Physics 23

Conference Date: 11/21/2024

Evaluator's Signature: [illegible]

Evaluatee's Signature: Kevin Gratton Roberts

Faculty member's signature does not necessarily imply agreement. It is merely an acknowledgement that the complete report has been read and a copy received.

Narrative on the Observation of Prof. Kevin Roberts

Emin Menachekanian

November 15, 2024

A single observation took place for Prof. Roberts for his Physics 23 class in Fall 2024 on Friday, 10/25/2024 in SCI 106 from 9:45 - 11:10 am. The class exclusively involved a lab, which was about the latent heat of fusion in the phase transition between solid water (i.e., ice) and (liquid) water. The class started with 8 students, but many more came in late. The table below shows the attendance as a function of time. (The values may be off by 1 student, because I may or may not have excluded the SI leader shadowing the class.)

Time	Number of Students
9:45 am	8
9:55 am	14
10:00 am	20
10:03 am	22
10:08 am	25
10:23 am	29
10:29 am	30
10:45 am	31

On that note, something must be done to encourage students to arrive on time. If it was a few students coming in late, then that seems feasible. However, having this many students arrive significantly late on a lab day should certainly warrant some discussion, as it looked to me like many of them were consciously coming in late, knowing that there wouldn't be any consequences. Moreover, one of the students who arrived an hour late was allowed to join a group without any seeming repercussions. Prof. Roberts had a discussion with this student, but ultimately ended up giving them permission to join a group that had less members than the rest. In the end, perhaps Prof. Roberts should adhere to some level of strictness regarding this level of truancy.

On a different note, I'm certainly happy to see that Prof. Roberts has taken the committee's feedback from past evaluations and given students more time to do the lab. In fact, Prof. Roberts started with the pre-lab lecture immediately at the beginning of class. Nevertheless, this lecture really could have used a lot of refinement.

For one, the lecture was extraordinarily dry, as it was essentially geared towards rewriting the procedure outlined in the lab worksheet, without any real visuals being utilized to simplify the steps. In other words, the lab worksheet already provided this information, rendering much of the pre-lab lecture as somewhat superfluous. The lecture really should have done something different, particularly if the intention was to provide the students with the steps to do the lab in a more fluid fashion. One recommendation would be to have provided very simplified drawings of the apparatus on the board, and to have outlined the steps by providing details that could have been added to the diagram, or redrawn in another diagram. Again, the diagram(s) did not need to be anything intricate.

Moreover, the pre-lab lecture's effectiveness was further exacerbated by the fact that there was a video to go along with the lab itself. It was unclear to me if the students had already watched the video. It would have made sense to have them watch the video ahead of time, in which case the pre-lab lecture could have been cut down significantly in time. In that way, the students could have used up more of the time to think about the procedures and how to approach the measurements carefully. Indeed, the equipment being used wasn't really outlined either during the pre-lab lecture, which would seemingly point to the students already having watched the video. Nevertheless, it seemed that many were not entirely sure on what to do when getting started with the lab, so that perhaps they hadn't prepared enough before coming into the lab.

The pre-lab lecture lasted approximately 40 minutes. The latter part of the lecture was spent drawing a bunch of tables that students would have to generate in Excel while doing the lab. I think it's fabulous that Prof. Roberts is trying very hard for students to get used to doing basic computations using spreadsheets—which could easily be a precursor to doing computational science at a more advanced level. In any case, it seemed a bit farfetched to explain all of those details in a matter of 20 minutes or so, particularly with such tables not being outlined within the lab worksheet itself. In other words, there didn't look to be any associated instructions on how to set up these tables apart from what was being presented in the lecture itself. Sure, the lab does have a data and analysis section, but it's not really set up in this way. Certainly, it is nice to expect the students to piece things together in their groups, but the presentation of the tables and their manipulation was, again, very dry. A bunch of tables with a huge number of columns and rows were being drawn on the whiteboard, which really took a lot of time with, in my opinion, quite diminishing returns. Indeed, as I looked around the room, many students seemed utterly confused by the description

while they were diligently trying to copy down whatever was being written on the board.

To be honest, it would have been much more efficient to have just plugged in his laptop to the projector to show a working model of the various tables, and then, for example, to have given them physical copies of the tables—or, even better, provided them with an Excel file with the columns and rows already labeled—so that students could have then populated the tables accordingly (whether by filling out raw data, or using that data to input functions and conditions to obtain values for other columns and/or rows). Nevertheless, it was still nice that he had written down reasonable, but not accurate, numbers into the tables as a "proof of concept," just to show them what numbers to expect.

As a final note about the pre-lab lecture itself, I think it took way too long to decide upon groups. I appreciate that Prof. Roberts is trying to mix up groups by doing what seems like a randomization through Canvas. I think that's a decent tactic to help students get used to working with others, as well as to get an opportunity to get to know more of their classmates. Nevertheless, the process took longer than it should have: it took maybe around 7 or 8 minutes. It would have been much more efficient to make the groups ahead of time, and then to adjust accordingly during class (e.g., if certain students were not present).

One other thing to note involves the Supplemental Instruction (SI) leader, Felix, who shadows Prof. Roberts' class. First off, he should not be present when a lab is taking place, as that's the protocol I seem to recall when I had SI leaders shadowing my classes in the past. Not only should he not have been in the class, he was taking the role of a teaching assistant, and that definitely should not be happening. Even more than that, his demeanor was a bit condescending toward the students he was helping out, as he tended to vocalize his frustration with students not understanding what to do, or how to do specific measurements, during the experiment. During the pre-lab lecture, Felix was quite consistently asking questions to Prof. Roberts, which made me think that he was an active student in the class. In the end, the SI leader is only required to shadow the lecture portion of the class, as that's what will then be used when the SI sessions are being held for students who are presently in any Physics 23 sections being offered. If during the lectures the SI leader helps students out with certain questions during the break, then I don't see that as being a problem; however, to actively have the SI leader take on a role as a teaching assistant is not the intention of the SI program.

During the lab itself, the students were hard at work, and Prof. Roberts was bouncing around from group to group, helping them out and answering their questions. Again, in that regard, Prof. Roberts has a great rapport with his students, as they feel very comfortable asking him questions and listening to, as well as implementing, his feedback.

As a final note in this narrative, I would like to briefly comment on some aspects of Prof. Roberts' Canvas and Gradescope class shells. Canvas is the default Learning Management System (LMS) being used at SMC, while Gradescope is an assignment submission and grading platform. Although Canvas can handle the submission and grading of turned-in work, Gradescope arguably does it much better.

In any case, in looking through Gradescope—to which I have access (since I also use Gradescope, and have been invited to Prof. Roberts' Physics 21 class shell on Gradescope)—I was really struck by the sheer number of assignments present there. To me, it seems a bit overwhelming from the student's perspective. It's not to say that having assignments is a bad thing, as it is important for students to be diligent in submitting assignments in order to earn a proper grade at the end. Nevertheless, it does seem like a huge chunk of this could be trimmed down to make it less taxing on the students. For instance, there are close to 30 "Textbook Notes" assignments. I know Prof. Roberts was trying to have students engage in reading the book and hold them accountable for it. However, to a student, submitting so many notes seems like a monumental task. There are also quite a few "In-Class Work" assignments, which seem a bit unnecessary to turn in. I get that perhaps the latter assignments are a way to quantify in-class participation, but the large number of such assignments adds to the workload of both Prof. Roberts, as well as the student, with a high likelihood of diminishing returns.

The "Homework Hard Copy" assignments are a bit strange, as the syllabus doesn't really outline exactly how these hard copies are going to factor into the overall percentage of the homework. It does say that submitting the hard copies is a requirement to receive full credit, but it's not clear how much gets deducted if those hard copies are not turned in. Based on the homework grades being populated in Canvas, those seem to be exclusively coming from Mastering. As such, it's not clear how this gets adjusted in the end.

I think the most striking thing about these latter assignments is that none of them are graded. To be honest, it really seems like Prof. Roberts is biting off way more than he can chew in terms of grading. This, in turn, trickles over to the exams as well. Indeed, Exam 1 is still not graded, as far as I can tell from Gradescope. It's unclear if the exam is being graded on Gradescope, or if it's physically being graded. If it is the latter, then there is no indication of those grades being up in the Canvas grade-book and, as such, it would also make it pointless to use Gradescope for grading the exams in the first place. If it is the former, then there's certainly no indication of the grading being complete on Gradescope. Ultimately, exams must always be prioritized as far as grading is concerned. They are

generally worth such a large portion of the grade, that such data needs to be provided to the students to see how they're faring.

Assuming that Physics 23 also has a similar landscape of assignments present on Gradescope, I feel that it is unrealistic to expect one instructor to be able to diligently grade items on a consistent basis for one such class, let alone two. In addition, I think it's even more unrealistic to expect students to submit such a large volume of work (a good chunk of which seems like busy work) for a class, particularly when it can be argued that most of this work will not necessarily help a student learn the content any better. Sure, it's important for students to take the work seriously and to do the best they can in any set of assignments that they're required to submit. Nevertheless, with the sheer number of things that the students need to turn in—especially at the supposed high level being outlined within the syllabus—it is very likely that the thought of learning will be put on the back-burner and be replaced by a potentially frantic need to just submit something, no matter how incoherent or incomplete it may be. I would not be surprised if students would outright stop turning things in altogether at some point, particularly if there's no adverse penalty to doing so. The lack of grades also adds fuel to this fire, as then there's seemingly also no real incentive to submit anything either.

Ultimately, my main recommendation would be for Prof. Roberts to rethink what a reasonable amount of work is for a student—as well as for himself, as an instructor—particularly as it pertains to graded assignments. Once the assignments are at a manageable number, then there should be a huge priority to try to grade the most important items (e.g., exams) and to at least provide guidance as to how other things will be graded if they cannot be done in as timely a manner.

Moreover, even though Prof. Roberts' syllabus is quite substantial and really tries hard to outline many different facets of the class, I nevertheless think it should be made clearer, particularly with respect to how certain aspects are to be graded and factored into the grade. In some ways, I think it might be less daunting if the syllabus was shortened, so that it could really get at the heart of how the class will be managed. I know that I say this while also having a relatively lengthy syllabus myself, but perhaps it could be broken up into a couple of documents. Perhaps one of those documents can act as the syllabus itself, and then there could be supplementary documents that potentially expand on some additional features (e.g., a description of the proper way to present homework or exam problems, or a further illustration of the various on-campus resources for students that are listed in the syllabus itself).

PROFESSIONALISM FORM

Evaluation of: Kevin Roberts Semester: Fall 2024

Department: Physical Science

Evaluator: Jennifer Hsieh Position: Department Chair

This section to be completed by the department chair / leader or department chair/ leader designee *As input to the evaluation procedure*	Satisfactory or Better	Needs Improvement	Unsatisfactory	Not Observed (NO) Not Applicable (NA)
1. Demonstrates cooperation and sensitivity in working with colleagues and staff	●	○	○	○
Comments:				
2. Responsive to constructive feedback	○	●	○	○
Comments: Kevin has been really good about incorporating feedback, but he needs to extend the feedback to more than just the immediate issue. We said he needs to work on his lectures to be more organized. He did, but now his prelab lectures are disorganized. He needs to be able to recognize that prelab lectures should have been addressed without us saying so.				
3. Participates at the appropriate level in creation, assessment, and / or discussion of SLOs	●	○	○	○
Comments:				
4. Submits required departmental reports and information on time (Drop roster, grade roster, flex form)	●	○	○	○
Comments:				
5. Maintains adequate and appropriate records	○	●	○	○
Comments: Concerning grade distributions, see my extended comments in the attachment, I reviewed his Physics 21 Canvas shell for Spring 2024 and to date there are no grade entries for any of the exams or the labs. Where are these scores? How do the students access them?				
6. Observes health and safety regulations	●	○	○	○
Comments:				
7. Per the collective bargaining agreement, maintains office hours and attends required meetings	●	○	○	○
Comments:				

8. Responsive to students and is accessible to students	●	○	○	○
Comments:				
9. Adheres to departmental and college policies	○	●	○	○
Comments: While not a policy, giving a disproportionate number of A's consistently every semester has an impact on the Physics progam and the department. Please see attached notes for further discussion.				
10. Participates in departmental and campus wide activities	●	○	○	○
Comments:				
11. Maintains currency in professional knowledge through professional literature, professional memberships, workshops, conferences, or other activities	●	○	○	○
Comments:				

Additional comment: Please see attached notes.

Conference Date: 11/19/2024

Evaluator's Signature: JM Hair

Evaluatee's Signature: Kevin F Roberts

Faculty member's signature does not necessarily imply agreement. It is merely an acknowledgement that the complete report has been read and a copy received.

Santa Monica College

Course Outline for
PHYSICS 21, Mechanics with Lab

Course Title: Mechanics with Lab — Units: 5.00

Total Instructional Hours (usually 18 per unit):	144.00
Total Student Learning Hours:	270.00
Hours per week (full semester equivalent) in Lecture:	3.50
In-Class Lab:	4.50
Arranged:	0.00
Outside-of-Class Hours	180.00

Date Submitted: March 2022
Date Updated: June 2022
C-ID: PHYS 205
Transferability
CSU/UC: Transferability
- Transfers to CSU
- Transfers to UC

Cal-GETC Area:
Cal-GETC Area 5: Physical and Biological Sciences
- 5A: Physical Science
- 5C: Laboratory

IGETC Area:
IGETC Area 5: Physical and Biological Sciences (mark all that apply)
- 5A: Physical Science
- 5C: Physical or Biological Science LABORATORY

CSU GE Area:
CSU GE Area B: Scientific Inquiry and Quantitative Reasoning (mark all that apply)
- B1 - Physical Science
- B3 - Laboratory Sciences

SMC GE Area:
GENERAL EDUCATION PATTERN (SMC GE)
- Area I: Natural Science

Degree Applicability: Credit - Degree Applicable
Prerequisite(s): MATH 7
Pre/Corequisite(s): None
Corequisite(s): None
Advisory(s): None

I. Catalog Description

This course is a calculus-based study of the mechanics of rigid bodies, emphasizing Newton's laws and its applications. This course includes an introduction to fluids. It is designed for engineering, physical science, and computer science majors.

II. Examples of Appropriate Text or Other Required Reading: (include all publication dates; for transferable courses at least one text should have been published within the last seven years)

1. University Physics with Modern Physics, 14th , Young & Freedman, Pearson © 2015, ISBN: 9780321973610;
2. Physics for Scientists and Engineers, 10th, Serway & Jewett, Cengage Learning © 2018, ISBN: 9781337553278;
3. Fundamentals of Physics, 11th, Halliday, Resnick, Walker, Wiley © 2018, ISBN: 9781119286240;
4. Santa Monica College Physics Faculty . Online Laboratory Manual for Physics 21, Santa Monica College
5. Mastering Physics, computer-based homework management and tutoring program to accompany text.
6. Heuvelen, Alessandris, Braun, Wozny. Study Guide with ActivPhysics 1, Volume 1.
7. Student Solution Manual to accompany textbook.

III. Course Objectives

Upon completion of this course, the student will be able to:

1. Use the basic concepts in physics to qualitatively explain physical phenomena.
2. Compile data from a physical problem and synthesize these data into a mathematical problem.
3. Take the mathematical problem to a successful conclusion using mathematical principles of algebra, trigonometry, and calculus.
4. Operate, adjust, and use the equipment necessary in laboratory experiments to obtain quantitative measurements.
5. Estimate the uncertainty of a measurement and calculate the uncertainty in the results obtained from such measurements.
6. Use the mathematical tools of the computer, such as spreadsheets and graphing programs, to analyze data.
7. Write laboratory reports including statement of purpose, compilation of data, theory involved in the experiment, method of measurements, samples of calculations, tabulation of results, and analyses of sources of error.
8. Continue their science education by having the skills to succeed in more advanced physics courses.

IV. Methods of Presentation:

Other (Specify), Lab, Lecture and Discussion, Experiments, Group Work, Observation and Demonstration

Other Methods: The methods of presentation used in this class reflect the importance of both a conceptual understanding of physics as well as the analytical mastery of the subject. Lecture and class-demonstrations, including computer simulations and videos, are used to introduce topics to students and to ground those ideas in reality. Most experimental work not only reinforces core concepts but teaches experimental measurement techniques and the errors associated with them. Physics Education Research (PER) has shown that active-engagement instructional strategies greatly improve student learning. As a result, collaborative learning activities are used in lecture and lab as part of the methods of presentation.

V. Course Content

% of Course	Topic
20.000%	Kinematics: Introduction & Vectors, Motion in 1 and 2 Dimensions
25.000%	Dynamics: Force, Motion and Newton's Laws, Circular Motion, Gravitation
25.000%	Conservation Principles: Work, Energy, Power, Conservation of Energy, System of Particles, Conservation of Momentum
25.000%	Rotations and Oscillations: Rotational Dynamics, Angular Momentum, Static Equilibrium, Simple Harmonic Motion
5.000%	Introduction to Fluids
100.000%	Total

Vb. Lab Content:

% of course	Topic
8.00%	Measurement and Errors
7.00%	Addition of Vectors
8.00%	Graph Matching and Motion
8.00%	Projectile Motion
8.00%	Circular Motion
8.00%	Newton's Second Law
8.00%	Non-conservative Forces

8.00%	Energy
8.00%	Ballistic Pendulum
8.00%	Rotational Inertia
7.00%	Rigid Equilibrium
7.00%	Physical Pendulum
7.00%	Problem Solving Activities
100.00%	Total

VI. Methods of Evaluation: (Actual point distribution will vary from instructor to instructor but approximate values are shown.)

Percentage	Evaluation Method
55 %	Exams/Tests - 3 or 4 Unit Exams
25 %	Final exam
15 %	Lab Reports - 8 to 12 Laboratory Activities
5 %	Written assignments - Problem Homework Assignments
100 %	Total

VII. Sample Assignments:

See attached files:

See attached files:

VIII. Student Learning Outcomes

1. When presented with a physical situation and asked to solve a particular problem in mechanics (i.e. two masses connected via a string passing over a pulley), the student will follow a logical process based on well-established physics principles (i. e. Newton's laws) and demonstrate ability to use basic mathematical techniques including calculus.
2. When conducting a laboratory experiment and writing a lab report, the student will demonstrate understanding of the basics of the scientific method by being able to state a clear and testable hypothesis, taking careful measurements, estimating uncertainties, and drawing appropriate conclusions based on gathered data and on sound scientific principles.

Santa Monica College

Course Outline for
PHYSICS 23, Fluids, Waves, Thermodynamics, Optics with Lab

Course Title: Fluids, Waves, Thermodynamics, Optics with Lab

Units: 5.00

Total Instructional Hours (usually 18 per unit):	126.00
Total Student Learning Hours:	270.00
Hours per week (full semester equivalent) in Lecture:	4.00
In-Class Lab:	3.00
Arranged:	0.00
Outside-of-Class Hours	144.00

Date Submitted: March 2022
Date Updated: June 2022
C-ID: PHYS 215
Transferability
CSU/UC: Transferability
- Transfers to CSU
- Transfers to UC

Cal-GETC Area:
Cal-GETC Area 5: Physical and Biological Sciences
- 5A: Physical Science
- 5C: Laboratory

IGETC Area:
IGETC Area 5: Physical and Biological Sciences (mark all that apply)
- 5A: Physical Science
- 5C: Physical or Biological Science LABORATORY

CSU GE Area:
CSU GE Area B: Scientific Inquiry and Quantitative Reasoning (mark all that apply)
- B1 - Physical Science
- B3 - Laboratory Sciences

SMC GE Area:
GENERAL EDUCATION PATTERN (SMC GE)
- Area I: Natural Science

Degree Applicability: Credit - Degree Applicable
Prerequisite(s): PHYSCS 21
and
MATH 8
Pre/Corequisite(s): None
Corequisite(s): None

Advisory(s): None

I. Catalog Description

This course is a calculus-based study of fluids, waves, thermodynamics, and light intended for engineering and physical science students.

II. Examples of Appropriate Text or Other Required Reading: (include all publication dates; for transferable courses at least one text should have been published within the last seven years)

1. University Physics with Modern Physics, 15th , H. Young & R. Freedman, Pearson © 2019, ISBN: 9780135159552;
2. Physics for Scientists and Engineers, 10th, R. Serway & J. Jewett, Cengage Learning © 2019, ISBN: 9781337553278;
3. Fundamentals of Physics, 10th, D. Halliday, R. Resnick, J. Walker, Wiley © 2013, ISBN: 978-1118230728;
4. Santa Monica College Physics Faculty . Online Laboratory Manual for Physics 23, Santa Monica College
5. Mastering Physics . Pearson, 15th ed.
   Computer-based homework and tutorial problems to accompany the Young and Freedman text.

III. Course Objectives

Upon completion of this course, the student will be able to:

1. Use basic concepts in physics to construct a qualitative explanation of physical phenomena.
2. Use physical principles and laws to construct a quantitative explanation of physical phenomena through mathematical analysis.
3. Utilize various mathematical methods such as algebra, trigonometry and calculus, to navigate through the quantitative analysis of a physical problem.
4. Proficiently operate and adjust laboratory equipment to obtain quantitative measurements in a physics experiment.
5. Estimate the uncertainty of a measurement and the propagation of error for results dependent upon the measurement.
6. Use various computational tools such as spreadsheets and graphing programs to analyze data.
7. Compose organized and thorough analyses of work done in the laboratory.

IV. Methods of Presentation:

Lecture and Discussion, Other (Specify), Group Work, Lab, Experiments
Other Methods: The methods of presentation used in this class reflect the importance of both a conceptual understanding of physics as well as the analytical mastery of the subject. Lecture and class-demonstrations, including computer simulations and videos, are used to introduce topics to students and to ground those ideas in reality. Most experimental work not only reinforces core concepts but teaches experimental measurement techniques and the errors associated with them. Education research has shown that active-engagement instructional strategies greatly improve student learning. As a result, collaborative learning activities are used in lecture and lab as part of the methods of presentation.

V. Course Content

% of Course	Topic

13.000%	Fluid dynamics
24.000%	Mechanical waves: transverse string waves, sound waves
33.000%	Thermodynamics: temperature and 0th law, kinetic theory of classical gases, heat and 1st law, heat transfer, entropy and 2nd law
30.000%	Geometric and wave optics: reflection, refraction, interference, diffraction
100.000%	Total

Vb. Lab Content:

% of course	**Topic**
10.00%	Fluid Mechanics
10.00%	String Waves
10.00%	Longitudinal Waves
10.00%	Thermal Expansion
10.00%	Heat Transfer
10.00%	Latent Heats
10.00%	Ratio of Specific Heats
10.00%	Refraction
10.00%	Mirrors and Lenses
10.00%	Diffraction

100.00%	Total

VI. Methods of Evaluation: (Actual point distribution will vary from instructor to instructor but approximate values are shown.)

Percentage	Evaluation Method
55 %	Exams/Tests - 3-5 Unit Exams
25 %	Final exam
5 %	Homework
15 %	Lab Reports - Laboratory
100 %	Total

Additional Assessment Information:
The unit exams and quizzes are given regularly throughout the semester and will include questions that are of the short-essay type and numerical problems similar to those assigned in class. A comprehensive final exam is given covering the entire semester's work. This three hour exam consists of questions and problems that require the student to apply the knowledge obtained from the course and extend it to new situations.

VII. Sample Assignments:

Sample homework assignment:

1. Weekly homework assignment consisting of 20-30 textbook problems such as:

A soft drink (mostly water) flows in a pipe at a beverage plant with a mass flow rate that would fill 220 0.355-L cans per minute. At point 2 in the pipe, the gauge pressure is 152 kPa and the cross-sectional area is 8.00 cm2. At point 1, 1.35 m above point 2, the cross-sectional area is 2.00 cm2.
a) . Find the mass flow rate.
b) Find the volume flow rate
c) . FInd the speed at point 1
d) . FInd the speed at point 2.

sample lab assignment:

In this laboratory experiment, students apply Archimedes' principle to determine the density of air in the lab room. They also identify an unknown substance using Archimedes' principle.
The sample lab experiment is attached as a file.

VIII. Student Learning Outcomes

1. When presented with a physical situation and asked to solve a particular problem in fluids, thermodynamics, wave phenomena, or optics, the student will follow a logical process based on well-established physics principles (i.e. laws of thermodynamics) and demonstrate ability to use basic mathematical techniques, including calculus.
2. When conducting a laboratory experiment and writing a lab report, the student will demonstrate understanding of the basics of the scientific method by being able to state a clear and testable hypothesis, taking careful measurements, estimating

uncertainties, and drawing appropriate conclusions based on gathered data and on sound scientific principles.

Generated on: 12/17/2024 3:38:37 PM

PHYSICS 21, MECHANICS WITH LAB

FALL 2024

COURSE INFORMATION

Course Title:	PHYSICS 21, MECHANICS WITH LAB
Section Number:	2961
Units:	5.00 units
Prerequisite(s):	MATH 7 or equivalent Trigonometry familiarity will be assumed
Day and Time:	M, W 12:30 PM – 03:00 PM
Location:	SCI 101
Day and Time:	F 12:30 PM – 03:30 PM
Location:	SCI 101

INSTRUCTOR INFORMATION

Instructor:	Kevin Roberts
Email Address:	Roberts_kevin31@smc.edu
Office Hours:	M 3:05–5:05, F 3:35–5:35
Location:	SCI 275

Additional Meetings on Zoom by Appointment

I welcome you to contact me outside of class and student hours. You may email me, message me on Canvas or tag me on the class Discord. You may also make office hours by appointment.

COURSE DESCRIPTION

This course is a calculus-based study of the mechanics of rigid bodies, emphasizing Newton's laws and its applications. This course includes an introduction to fluids. It is designed for engineering, physical science, and computer science majors.

COURSE OBJECTIVES

Upon completion of this course, the student will be able to:

1. Use the basic concepts in physics to qualitatively explain physical phenomena.
2. Compile data from a physical problem and synthesize these data into a mathematical problem.
3. Take the mathematical problem to a successful conclusion using mathematical principles of algebra, trigonometry, and calculus.
4. Operate, adjust, and use the equipment necessary in laboratory experiments to obtain quantitative measurements.
5. Estimate the uncertainty of a measurement and calculate the uncertainty in the results obtained from such measurements.
6. Use the mathematical tools of the computer, such as spreadsheets and graphing programs, to analyze data.
7. Write laboratory reports including statement of purpose, compilation of data, theory involved in the experiment, method of measurements, samples of calculations, tabulation of results, and analyses of sources of error.
8. Continue their science education by having the skills to succeed in more advanced physics courses.

STUDENT & INSTITUTIONAL LEARNING OUTCOMES

1. When presented with a physical situation and asked to solve a particular problem in mechanics (e.g., two masses connected via a string passing over a pulley), the student will follow a logical process based on well-established physics principles (i.e., Newton's laws) and demonstrate ability to use basic mathematical techniques including calculus.
2. When conducting a laboratory experiment and writing a lab report, the student will demonstrate understanding of the basics of the scientific method by being able to state a clear and testable hypothesis, taking careful measurements, estimating uncertainties, and drawing appropriate conclusions based on gathered data and on sound scientific principles.

REQUIRED TEXTS, MATERIALS, & SUPPLIES

1. Young, Freedman, and Ford, University Physics with Modern Physics. 15th ed. WITH MASTERING PHYSICS REQUIRED
   You can get either the digital or hard cover versions if you have an unused Mastering code. We will be using it for online homework.
2. Scientific or graphing calculator. You may use Desmos or Wolfram Alpha during homework assignments.

3. Computer and Internet access.
4. Installed desktop Microsoft office. (Free via SMC)
5. Notebook and writing implement(s) (digital tablets are an acceptable option)

RECOMMENDED RESOURCES & SKILLS

Supplementary Texts

1. Adelson, Get ready for physics
2. McMullen, Essential Calculus-based Physics Study Guide Workbook: Laws of Motion, Volume 1

Computer Skills

To succeed in this course, you should have the ability to:

- Navigate the Internet using a web browser.
- Manage files using either the Mac or Windows operating systems.
- Send and receive email messages and attachments.
- Use a word processing program like Microsoft Word or its equivalent.
- Navigating Canvas: checking assignment deadlines, uploading work, and checking grades. Every assignment and exam will be hosted here. Check frequently for any updates to assignments.
- Use a spreadsheet program like Microsoft Excel or its equivalent for data analysis for labs.

METHODS OF PRESENTATION

- Lab, Lecture and Discussion, Experiments, Group Work, Observation, and Demonstration
- Other Methods: The methods of presentation used in this class reflect the importance of both a conceptual understanding of physics as well as the analytical mastery of the subject. Lecture and class-demonstrations, including computer simulations and videos, are used to introduce topics to students and to ground those ideas. Most experimental work not only reinforces core concepts but teaches experimental measurement techniques and the errors associated with them. Physics Education Research (PER) has shown that active engagement instructional strategies greatly improve student learning. As a result, collaborative learning activities are used in lecture and lab as part of the methods of presentation.

METHODS OF EVALUATION

- Unit Exams: Exams (3 @100 pts each) are mandatory and must be taken when scheduled. Exams will consist of 5 free-response problems that you fully work out. I will provide all physical constants that you will need, and you will make a **hand-written** formula sheet on a single 8.5-by-11-inch sheet of paper (both sides), printouts are NOT ALLOWED. Tests are **not** cumulative, but concepts build throughout the course. **The exam dates are 09/18, 10/16, and 11/13.** The exams will be 2 hour long and are given at the beginning of the class period.
- Final Exam: This is a cumulative exam that will be given during finals week. It will have 10 questions chosen from the entire course.
- Lab: Labs will be held on Fridays. The labs that we do will be posted onto Canvas. You are expected to read the week's lab ahead of time, so you can understand before we begin the lab. There will also be pre-labs due before class to prepare you for the day's work. The experiments can be finished more quickly if you come prepared. Lab reports will be due one week following the lab session, unless otherwise noted. During lab days, we will be breaking up into groups of 2 or 3. You will receive a 0 for any missed lab. I will drop your lowest lab score.
- Homework: You will be assigned between 20-30 problems each chapter. We will be using online homework via Pearson's Mastering Physics. You will be able to make unlimited attempts for each question without penalty. For full credit, you will also submit a scanned written hard copy (or answers written by hand on a digital tablet) to Canvas. Full reasoning for EACH question is required for full credit, "Rules for Homework" for details (INCLUDING multiple choice questions). Anticipate that you will require 6-10 hours to complete the homework each set. Homework will be due at **11:59 PM each Tuesday.**
- Textbook Notes: textbook notes will cover the material that will be covered in lecture that day, due midnight the night **before** the class. The textbook reading and note-taking help you come to lecture prepared and reduces time spent on homework. Completing textbook notes prepares you for the in-class work.

- In-class work: In-class work will be assigned in the class, at differing times in the lecture. We will be breaking up into groups of three (or two), randomly generated, to discuss and solve problems. You will generate a single document (paper or digital) for the group and each group member will take turns writing, so each submission should have each group member's handwriting on it. After a discussion within your group, I encourage you to discuss your work across groups. We will then go over the problem together as a class. You will then upload your work in the class period. In-class work may be excused (with documentation) but cannot be made up.
- A grade of "Incomplete" may be granted at the very end of the term if an unforeseen event or illness prevents you from completing the final coursework and at the time you have earned a "C" or better. "Incomplete" grade situations are extremely rare, and are entirely at the discretion of the instructor, within the parameters set above.

Your final grade will be calculated using the following percentages:

Percentage of Grade:	Evaluation Method:
5%	Textbook Notes
8%	In-class work
20%	Lab Reports
12%	Homework
33%	Unit Exams
22%	Final Exam

GRADING SCALE

A = 90.0-100%
B = 80.0-89.9%
C = 65.0-79.9%
D = 55.0-64.9%
F = 54.9% and below

ATTENDANCE, DROPS, & WITHDRAWALS

You are responsible for maintaining your own enrollment status. You may drop the course with a withdrawal until Nov 17. It is NOT possible to drop the class that date. General information regarding drop dates, withdrawals, refunds, and other enrollment matters may also be found at the Admissions section of the SMC website. See Admissions Dates and Deadlines for the complete semester schedule including short term courses.

- Attendance is crucial to your success. The class may cover material that is not discussed or found elsewhere, so you will miss out on an essential part of the learning process if absent. Regular attendance is required of every student. You should attend every class, but extenuating circumstances arise that can make this difficult. If you cannot attend a class, please let me know. If circumstances make you miss more than 3 classes during the semester, you may be overextended. I ask that you come see me to discuss your options. Missing 4 class sessions MAY lead you to be dropped from the course.
- Monday Sep 09 is the last day to withdraw to Receive a Refund. Sunday, Sep 22 is the last day to withdraw with no grade showing on your permanent record. Sunday, Nov 17 is the last day to withdraw from this class with a grade of W. The last day to request for a pass/no pass grade is Monday Dec 16.
- **The date of the final is Wednesday 12/11 at 12 PM–3 PM**

MISSED AND LATE WORK

- Late work homework is accepted up until the unit exam covering the material, but there is a deduction equal to 20% of the assignment. In addition to wanting to avoid the grade penalty, you should make every effort to submit all work by its deadline so you can receive the prompt feedback and grade that are an essential part of the learning process and success in college. Late textbook notes and in-class work is not accepted but may be excused with documented extenuating circumstances.
- When absent, you are still responsible for completing and submitting all work on time; however, if you have a documented extenuating circumstance that prevents the timely submission of work, please speak to me as soon as possible to receive an accommodation with a new reasonable deadline.
- Tests are mandatory and must be taken when scheduled. Under compelling circumstances with documentation, they can be made up.

EXTRA CREDIT

You may choose ONE of the following extra credit options. The points will be added to the exam section of your grade.

- You may attend a Distinguished Scientist Lecture and write a two-page analytical reflection paper connecting what you learn at the event to your class materials for up to 10 extra credit points. (You may also watch recorded lectures of scientists, subject to the professor's approval).
- You may participate in the Sustainable Works program for up to 10 extra credit points. For more information visit the Sustainable Works site.

CLASSROOM POLICIES

Class Participation

- Learning is a collaborative exercise; this classroom is your space too! Everyone belongs here, no matter your background. I highly encourage you to be "wrong" here; it is how we learn! If you already knew everything, you wouldn't need me! Sometimes, active participation can feel uncomfortable, particularly if you are unsure of the "answers." One of the themes of this course, as I teach it, is that science (really all knowledge) is a process more than a set of facts. Like a learning a musical instrument, practicing helps us to become better scientists!
- All of us in the class, you, me, your peers, have a responsibility to create an environment in which we can all learn from each other. I expect everyone to participate in class so that we can all benefit from the insights and experiences that each person brings.
- During lab time, all group members are expected to contribute equally. Before beginning the lab, you will decide among you who will be doing which roles and write them at the top of the lab worksheet. I will be periodically checking in on everyone throughout the lab period. If you do not contribute your portion of work during a lab, you will receive a zero for that lab. If you would like help, do not hesitate to ask me BEFORE the end of the lab.
- Learning doesn't stop after the class ends; you should all use the course Discord. You should use it to pose homework questions and answer questions of your peers. You can also use it to coordinate in-person and Zoom study groups with each other.

Classroom Environment

- Please ask questions during class
- This classroom is welcoming to all. I expect everyone to be respectful in how they communicate and interact with every person in this class. Racist, sexist, homophobic, and other forms of language that potentially marginalize or demean any student are not tolerated.
- In this class we will be sharing multiple perspectives. Please remember to be respectful with one another.
- Please refrain from having side-conversations during the lecture portions of the class. We will be having several periods for discussions during class time.
- You are expected to follow all Codes of Conduct as established by Santa Monica College. These documents can be reviewed at the Student Judicial Affairs webpage. See the rules for Student Conduct (AR 4410), Code of Academic Conduct (AR 4411), Student Honor Code (AR 4412).

Electronic Devices

- During the lecture time of the class, the use of electronic devices such as laptops, and smartphones are **NOT** permitted. You may use tablets or foldable laptops with a writing surface that are face-up and in "note-taking" mode. During lab and group work time, laptops are permitted; however, to maximize participation and learning, this usage is limited to activities supporting concurrent class activities.
- Cell phones and other electronic devices should be on silent mode during class time. Put all electronics on "do not disturb" mode during class to create a good learning environment for everyone.

Food & Drink

Food or drink is prohibited in the classroom except for water bottles, which are permitted if they remain closed when not in active use and are kept away from all equipment.

Recording of Class Lectures

In accordance with Section 78907 of the California Education Code, students shall not use any electronic listening or recording device in any classroom without the prior consent of the instructor, except as necessary to provide reasonable auxiliary aids and academic adjustments to disabled students.

Lab Reports

- We will be completing 11 labs this semester 2 of which we will write out full reports. For the other 9 labs, your will complete the worksheets and turn one week later. The worksheets will be worth 50 points.
- For the full reports, you will have 4 weeks to complete a 4-page, two-column, single-space, size-10 font report. A sample report is provided. The report will be worth 150 points.
- The report should have an introduction/abstract, materials and methods, experimental results, discussion and analysis, and a conclusion sections, clearly marked. If there are extensive derivations of equations, you should also add a theory section.
- You must use the data you gather for your lab report.
- You may discuss the experiment with your lab partner and other classmates, but the lab report that you turn in must be your own work. Lab reports are subject to all the rules governing academic honesty.
- Complete details are provided by "Guidelines for a Physics Lab Report."

Homework

- We will be using online homework via Pearson's Mastering Physics. You will be able to make unlimited attempts for each question with no penalty.
- While you are completing the homework, you should write out your reasoning: for simple conceptual questions, a couple of sentences; for longer problems full reasoning, see below.
- The homework in this class can be rather challenging. Anticipate that you will require 6-10 hours to complete the homework each chapter. You will likely need assistance with at least two or three problems per assignment.
- To ensure that you have enough time available to seek assistance, begin working on the problem sets as soon as possible.
- I encourage you to work with other students to complete homework problems and lab reports. I do expect that each student turn in their own individual work. You are required to turn in a copy of your own handwritten work onto Canvas. See "Rules For Homework" for expectations.
- If you are unable to do a problem, you may post online for other students help, email me to ask for help (see contact information above), or go to office hours. There are also FREE tutors offer via SMC, (https://www.smc.edu/student-support/academic-support/tutoring-centers/index.php) and see below.
- Learning doesn't stop after the class ends; you should all use the course Discord. You should use it to pose homework questions and answer questions of your peers. You can also use it to set up Zoom study groups with each other.

Rules For Homework

I want to you to treat each homework problems with the same level of care as you would on an exam. Here, I give a general outline of the rules you should use for your homework assignments. For each type of problem, I will create a guide on how to set-up and solve that problem.

1. General Appearance of Assignment
   a. Handwriting should be neat, legible, and reasonably dark. If the image contrast is not high enough, you will need to re-upload your document. Do not write on both sides if your graphite/ink bleeds through.
   b. Your homework should be logically organized and easy to follow.
   c. Problems must be written in exactly the order assigned. That is, problem 1 should be solved first, then problem 2, etc.
   d. You **must** submit your handwritten work to the "assignment" on Canvas for credit.
   e. For each assignment please only create **ONE** pdf with your favorite scanning software or app.

2. **You may write only one equation or statement per line.** After you have written one equation on a line, go to the next line to write the next equation. If you write small and find this wasteful, you may draw a line down the middle of your paper to make two columns, and then begin working down the right side of the paper after you have completely used up the left side.

3. The following steps must be followed when STARTING a homework problem:
   a. Draw a diagram which presents all information given in the statement of the problem. The diagram must be large enough for all important information to be represented clearly. It should be clear what type of problem you are solving based on your sketch alone. Any symbolic variables that appear in your math (such as x, t, F, etc.) <u>must</u> either appear in the diagram or be listed next to the diagram.

b. If appropriate, use your diagram to define a coordinate system by drawing coordinate axes or noting which direction is positive.
c. If information is given as a numerical value (such as 3.0 m, 12.0 s, 8.0 N, etc.), a symbol (such as *x*, *t*, *F*, etc.) must be assigned to the numerical value. For example, if a problem says that a box has a mass of 3.0 kg, you should write "*m* = 3.0 kg" (if you have more than one use subscripts: m_A, m_B, etc.) on your paper, on or next to the diagram. Do not simply write "3.0kg"; assign a symbol and write "*m* = 3.0kg". Use a single letter for each numerical value.

4. To begin COMPUTATION: Start your solution by stating one or more equations you have seen either in lecture or in the text (e.g., $F = ma$, $\Delta x = v_{av}\Delta t$, etc.) that is appropriate to the problem at hand. The first equation in a problem should NEVER have numerical values plugged into it; it should be strictly in "variable" form.

5. When FINISHING a problem: If you have an equation in which the variable you are trying to solve for appears, and all other quantities are known, follow the following steps:
   a. WITHOUT PLUGGING IN NUMBERS, isolate the variable. Exceptions: (1) You may always plug in zero. (2) When you have obtained a quadratic equation, you may work out numerical values for the coefficients, and then plug numerical values for the coefficients into the quadratic formula.
   b. Once you have an equation in which the variable is isolated on one side, plug numerical values (if given) into the quantities on the other side of the equation. **When you plug numerical values into an equation, you must include units with the numerical values.** (See item 8, below.)
   c. Compute the numerical value of the quantity of interest.

6. USE THE CORRECT UNITS.
   a. Every numerical answer must include the correct unit.
   b. Any time a number representing a physical quantity appears in a solution, units must be included. Do not insert numbers into an equation without inserting the accompanying units.

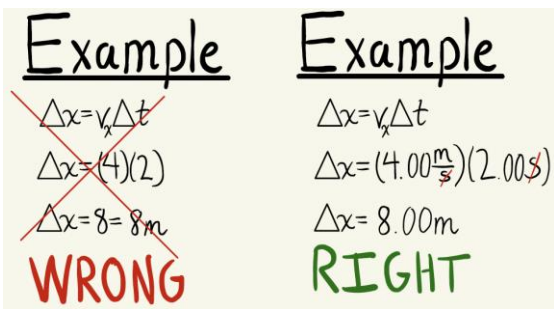

   c. Check to make sure that the correct unit for your answer follows from the computation; do not just "tack on" the correct unit at the end of the problem. This generally requires a simple computation. An example follows:

Example: Suppose you wish to compute the acceleration of a 5-kg object subject to a single 10-N force. You would write:

$$\Sigma F_x = m a_x$$

$$a_x = \frac{\Sigma F_x}{m} = \frac{10.0\,N}{5.00\,kg} = \frac{10.0\,kg\,m/s^2}{5.00\,kg} = 2.00\,m/s^2$$

Notice that expanding the derived unit newton "N" into the base units of "kg·m/s^2" allows you to cancel the "kg", leaving m/s^2, which is the correct unit for acceleration.

Example of Homework Presentation

The following examples illustrate the use of Homework Rules.

Problem 1:
A jogger is running in a straight line from point A to point B, which are separated by 200. m. He maintains a constant speed of 4.00 m/s. If the jogger is presently 50.0 m from A (and 150 m from B), and his stopwatch reads 20.0 s, what will be the reading on his stopwatch when he reaches B?

Identify:

This is a 1D Kinematics problem.
The jogger has constant velocity.

Set Up:

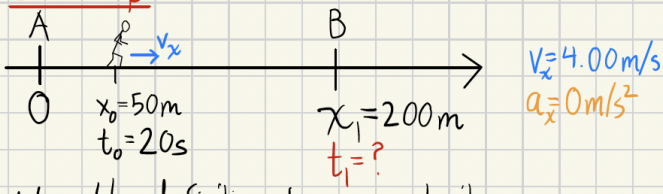

Use the definition of average velocity

$$v_{av\text{-}x} = \frac{\Delta x}{\Delta t} = \frac{x_1 - x_0}{t_1 - t_0} = v_x$$ because the x-velocity is constant

Execute:

So: $v_x = \frac{x_1 - x_0}{t_1 - t_0}$ solve for t_1

$$v_x(t_1 - t_0) = x_1 - x_0$$

$$t_1 - t_0 = \frac{x_1 - x_0}{v_x}$$

$$t_1 = t_0 + \frac{x_1 - x_0}{v_x}$$

$$t_1 = 20.0s + \frac{200.0\cancel{m} - 50.0\cancel{m}}{4\cancel{m}/s}$$

$$t_1 = 20.0s + 37.5s$$

$$\boxed{t_1 = 57.5s}$$

Dimensional Analysis

$$\frac{\cancel{m}}{\cancel{m}/s} = \frac{1}{1/s} = s$$

Evaluate: Running 150m ~ 1.5 football fields in about a minute is a reasonable time to run that that distance.

Problem 2: Two cars travel on the parallel lanes of a two-lane road. The cars' motions are represented by the position versus time graph shown in the figure. Answer the questions using the times from the graph indicated by letters.
A) At which of the times do the two cars pass each other?
B) Are the two cars traveling in the same direction when they pass each other?
C) A which of the lettered times, if any, does car #1 momentarily stop?
D) A which of the lettered times, if any, does car #2 momentarily stop?
E) At which of the lettered times are the cars moving with nearly identical velocity?

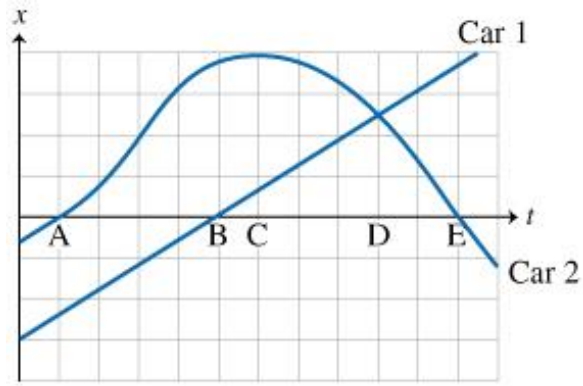

A) The two cars pass each other at D, because that is the instant that both cars have the same value of x.
B) No; at point D, the slope of car 1 is positive (so it it is moving in the positive direction) and the slope of car 2's curve is negative (so it is moving in the negative direction.
C) None; the curve of car 1 has a constant positive slope, so its velocity is never zero (and doesn't stop).
D) At point C, the slope of car 2's curve is zero, so it momentarily comes to a stop.
E) At point A, the curves of car 1 and 2 are momentarily parallel, so at that instant so have nearly identical velocity.

ACADEMIC HONESTY

The SMC Honor statement, signed by each student upon enrollment, reads: "In the pursuit of the high ideals and rigorous standards of academic life, I commit myself to respect and uphold the Santa Monica College Honor Code, Code of Academic Conduct, and Student Conduct Code. I will conduct myself honorably as a responsible member of the SMC community in all endeavors I pursue." Please be extremely careful that you do not engage in any behavior that could even be construed as cheating. Violations could result in failing grades, reports to the Campus Disciplinarian, and subsequent academic disciplinary

action. Examples of behaviors that are not permitted include but are not limited to: inappropriate language or physicality in the classroom, and inappropriate behaviors during an exam (talking with another student, looking at or copying from another student's paper, using a disallowed electronic device or calculator, using disallowed notes, leaving the room without prior permission, removing exam materials from the classroom).

ACCOMMODATIONS FOR DISABILITIES

I encourage students requesting disability-related accommodations to contact the Center for Students with Disabilities as soon as possible. I will work with you and the Center for Students with Disabilities to provide appropriate and reasonable accommodations. An early notification of your request for test-taking and/or other accommodations is necessary to ensure that your disability-related needs are addressed appropriately; testing accommodations cannot be applied retroactively.

The Center for Students with Disabilities is located on the first floor of the Student Services Center, and the phone number is (310) 434-4265 or email at dsps@smc.edu Additional Contact Information can be found at the Center for Students with Disabilities website.

EMERGENCY PREPAREDNESS & SAFETY

The safety of students at SMC is a priority. In the event of an emergency, you should contact the SMC Police Department (310-434-4300).

Please note that emergency procedures are posted in this classroom and every classroom. Please take the time to familiarize yourself with these procedures today, when knowledge of what to do can be the most effective. Also, procedures for various emergencies are delineated on the SMC Emergency Preparedness website.

We strongly encourage everyone to use the LiveSafe mobile app that Santa Monica College is providing to all students, faculty, and staff to download for free. The app provides a quick, convenient, and discreet way to communicate directly with Santa Monica College officials, enhancing your overall safety and allowing Santa Monica College to better serve you. Please use the app to anonymously report any acts of vandalism you may observe.

EMOTIONAL SUPPORT

Over the course of the semester, you may face difficult circumstances beyond your control, such as strained relationships, increased anxiety, alcohol/drug problems, feeling down or depressed, or having difficulty concentrating. Having any of these challenges may create barriers to learning or may make it difficult for you to meet some of the course requirements. If you or someone you know is suffering these or other similarly difficult circumstances, please reach out for support. The staff and faculty of Santa Monica College want you to succeed academically and care about your wellbeing. You may contact the college's Center for Wellness and Wellbeing (LA 110, 310-4344503), which provides short-term mental health services, community referrals, and a 24/7 emotional support line 800-691-6003. Or, if the situation is an emergency, you may contact the SMC Police Department (310-434-4300 or the SMC LiveSafe app). Also, please feel you can contact me so that I can help to direct you to support services on campus that might be most beneficial to you.

EQUITABLE LEARNING ENVIRONMENT

Santa Monica College is an intellectual community enriched and enhanced by diversity along a number of dimensions, including race, ethnicity and national origins, gender and gender identity, disability, sexuality, class and religion. We are especially committed to increasing the representation of those populations that have been historically minoritized in U.S. higher education.

GENDER EXPRESSION AND IDENTITY

I will gladly honor your request to address you by an alternate/preferred name or gender pronoun. Please advise me of this preference early in the semester or session so that I may make appropriate changes to my records. I will do my best to address and refer to all students accordingly and support classmates in doing so as well.

TITLE IX (SEX DISCRIMINATION)

Title IX is a comprehensive federal law that prohibits discrimination on the basis of sex in any federally funded education program or activity: No person in the United States shall, on the basis of sex, be excluded from participation in, be denied the benefits of, or be subjected to discrimination under any education program or activity receiving federal financial assistance. Those interested in the details should view the Title IX Legal Manual.

Students who have experienced some form of sexual misconduct or discrimination are encouraged to talk to someone about their experience, so they can get the support they need. You can learn more about available support at the Student Services Title IX webpage.

UNDOCUMENTED/DACA/AB540

Santa Monica College stands with the California Community Colleges Chancellor's Office—and hundreds of other educational and business organizations—in affirming that our undocumented students are as integral a part of our community as anyone else. Here at Santa Monica College, we remain committed to serving our undocumented students, to helping them fulfill their life's dreams and aspirations; this college will continue to be a safe environment for all students and personnel. We will work to provide the greatest support to students affected by this decision, and campus and student leaders alike have already rallied in solidarity as well as to provide resources. SMC joins the Chancellor's Office and all the other voices that will advocate determinedly in Congress for an effective solution to this issue, to end a cruel and unnecessary action that goes against the interests of local communities and our country at large.

The **Santa Monica College DREAM Program** provides support services to DREAMers (undocumented, AB540 and DACA recipients). Its purpose is to increase the personal growth, development and retention of DREAM students through academic, career, and personal counseling; assistance in applying for the California Dream Act/Financial Aid and scholarships; and providing workshops relative to DREAMers and their families. The Dream Program is located in the Student Services Center (SSC) 2nd Floor, Room 238. To make an appointment, call (310) 434-4892 or email DREAM@smc.edu.

STUDENT SUCCESS

Academic Counseling
The Counseling Department at SMC can help you with choosing and enrolling in classes, educational and career planning, navigating Corsair Connect, understanding financial aid, referrals to campus resources, and more.

Black Collegians
The Black Collegians Program/Umoja Community at SMC is designed to assist students of African descent in transferring to four-year universities and obtaining their associate degree. They offer services to help students become academically competitive and to set personal goals.

Extended Opportunity Program & Service (EOPS)
Extended Opportunity Program & Services (EOPS) at Santa Monica College is a program that supports the enrollment, retention, graduation, and transfer of students who are challenged by economic and educational disadvantages. They offer service such as academic, career, personal and transfer counseling; priority registration; supplemental textbook assistance; one-on-one tutoring; and much more.

Latino Center/Adelante
The Adelante Program is a success-oriented program focusing on academic achievement, transfer, cultural awareness, and personal growth. Adelante classes emphasize verbal, written, and critical thinking skills essential to college success. Classes accentuate the Latino experience within the context of the course subject, and most classes offer credits that are transferable to the UC and CSU systems.

Student Health Services Center
The SMC Health Services Center provides primary health care services to currently enrolled Santa Monica College students who have paid the California State mandated health fee. It focuses on health promotion, illness prevention, referrals, health and nutrition education. The staff consists of two registered nurses, a registered dietitian, two health assistants, and a nurse practitioner. The Center is located on the northeast corner of the Cayton Center Complex.

Tutoring

Free tutoring centers are available across the campus. There are dedicated centers for Business, CSIS, ESL, Math, Modern Languages, Science, and Writing & Humanities tutoring. For more information about their hours and locations, visit the SMC Tutoring Services Webpage.

Veterans Resource Center

The Veterans Resource Center at Santa Monica College serves veterans entering college for the first time or returning to college to further their education. The office acts as a liaison with the Veterans Administration verifying enrollment for students claiming benefits under the G.I. Bill or the Veterans' Vocational Rehabilitation Program. It also can also assist the veteran with referrals to various veteran-serving programs in the West Los Angeles area. If you would like additional information, please call (310) 434-8205.

STUDENT SERVICES CENTER

Located at the North end of campus on the corner of Pico and 20th street.

- Admissions & Records
- Black Collegians
- CalWORKs
- Care & Prevention Team
- Career Services Center
- Cashier's Office
- Center for Students with Disabilities
- Counseling
- Distance Education
- DREAM Program
- EOPS/CARE
- Financial Aid & Scholarships
- Guardian Scholars
- High Tech Center
- Institutional Research
- International Education Center
- Latino Center
- Pico Partnership
- Scholars Program
- Student Judicial Affairs
- Success & Engagement Center
- Transfer Counseling Center
- Welcome Center

DISCLAIMER

Some elements of the syllabus may be changed at the instructor's discretion. Students will be given at least 48 hours notice of changes whenever possible. If there is any aspect of this syllabus which you do not understand, or to which you take exception, please let the instructor know within the first week of class. Your continued attendance in this course constitutes an acknowledgement and acceptance of the requirements delineated in this syllabus.

Week #	Date (Monday)	MONDAY	TUESDAY	WEDNESDAY	THURSDAY	FRIDAY
1	08-26	Introduction LECTURE Chapter 1.1-1.3		LECTURE Chapter 1.4-1.7		LECTURE Chapter 1.8-1.10 EXP #01 Measurement and Errors
2	09-02	**LABOR DAY HOLIDAY**		LECTURE Chapter 2.1-2.4		LECTURE Chapter 2.5-2.6 EXP #02 Motion of a Freely Falling Body (FULL REPORT)
3	09-09	LECTURE Chapter 2.5-2.6 (Refund Deadline)		LECTURE Chapter 3.1-3.2		LECTURE Chapter 3.3-3.4 EXP #02 Motion of a Freely Falling Body (FULL REPORT)
4	09-16	LECTURE Chapter 3.5		CATCH-UP DAY		**EXAM 1 CH 1-3** LECTURE Chapter 4
5	09-23	LECTURE Chapter 4.1-4.3 EXP #03 Projectile Motion DROP DEADLINE! (09/22 without W)		LECTURE Chapter 4.4-4.6		LECTURE Chapter 5.1-5.2 EXP #04 Vector Quantities and the Force Table
6	09-30	LECTURE Chapter 5.3-5.5		LECTURE Chapter 5 (Practice Problems)		LECTURE Chapter 6.1-6.2 EXP #05 Newton's Laws
7	10-07	LECTURE Chapter 6.3-6.4		LECTURE Chapter 7.1-7.3		LECTURE Chapter 7.4-7.5 EXP #06 Dynamics of Circular Motion
8	10-14	CATCH-UP DAY		**EXAM 2 CH 4-6** LECTURE Chapter 8		LECTURE Chapter 8.1-8.3 EXP #07 Momentum and Collisions

9	10-21	LECTURE Chapter 8.4-8.6		LECTURE Chapter 9.1-9.2		LECTURE Chapter 9.3-9.4
10	10-28	LECTURE Chapter 9.5-9.6		LECTURE Chapter 10.1-10.2		LECTURE Chapter 10.3-10.4 EXP #08 Ballistic Pendulum
11	11-04	LECTURE Chapter 10.5-10.7		LECTURE Chapter 10 Practice Problems		CATCH-UP DAY
12	11-11	**VETERANS DAY**		**EXAM 3 CH 7-10** LECTURE Chapter 11		LECTURE Chapter 11.1-11.3 EXP #09 Torque and Moment of Inertia (FULL REPORT)
13	11-18	LECTURE Chapter 11.4-11.5 DROP DEADLINE! (11/17 with W)		LECTURE Chapter 13.1-13.3	**THANKSGIVING**	**NATIVE AMERICAN HERITAGE DAY**
14	11-25	LECTURE Chapter 13.4-13.5		LECTURE Chapter 13.6-13.8		LECTURE Chapter 14.1-14.3 EXP #10 Rotational Equilibrium
15	12-02	LECTURE Chapter 14.4-14.6		LECTURE Chapter 14.7-14.8		LECTURE Chapter 12.1-12.3 EXP #11 Physical Pendulum
16	12-09	LECTURE Chapter 12.4-12.6 Review	z	**FINAL EXAM** **12–3 PM**	FINAL EXAM WEEK	FINAL EXAM WEEK
17	12-16	FINAL EXAM WEEK	FINAL EXAM WEEK			

PHYSICS 23, WAVES, OPTICS, THERMO DYNAMICS

FALL 2024

COURSE INFORMATION

Course Title:	PHYSICS 23, WAVES, OPTICS, THERMO DYNAMICS
Section Number:	2961
Units:	5.00 units
Prerequisite(s):	Physics 21 and MATH 8 or equivalent
Day and Time:	M, W 09:45 AM – 11:50 AM
Location:	SCI 122
Day and Time:	F 09:45 AM – 12:15 PM
Location:	SCI 106

INSTRUCTOR INFORMATION

Instructor:	Kevin Roberts
Email Address:	Roberts_kevin31@smc.edu
Office Hours:	M 3:05–5:05, F 3:35–5:35
Location:	SCI 275

Additional Meetings on Zoom by Appointment

I welcome you to contact me outside of class and student hours. You may email me, message me on Canvas or tag me on the class Discord. You may also make office hours by appointment.

COURSE DESCRIPTION

This course is a calculus-based study of the wave motion, heat, kinetic theory, and optics. It is designed for engineering, physical science, and computer science majors.

COURSE OBJECTIVES

Upon completion of this course, the student will be able to:

1. Use basic concepts in physics to construct a qualitative explanation of physical phenomena.
2. Use physical principles and laws to construct a quantitative explanation of physical phenomena through mathematical analysis.
3. Utilize various mathematical methods such as algebra, trigonometry, and calculus, to navigate through the quantitative analysis of a physical problem.
4. Proficiently operate and adjust laboratory equipment to obtain quantitative measurements in a physics experiment.
5. Estimate the uncertainty of a measurement and the propagation of error for results dependent upon the measurement.
6. Use various computational tools such as spreadsheets and graphing programs to analyze data.
7. Compose organized and thorough analyses of work done in the laboratory.

STUDENT & INSTITUTIONAL LEARNING OUTCOMES

1. When presented with a physical situation and asked to solve a particular problem in thermodynamics, wave phenomena, or optics, the student will follow a logical process based on well-established physics principles (i.e. laws of thermodynamics) and demonstrate ability to use basic mathematical techniques, including calculus.
2. When conducting a laboratory experiment and writing a lab report, the student will demonstrate understanding of the basics of the scientific method by being able to state a clear and testable hypothesis, taking careful measurements, estimating uncertainties, and drawing appropriate conclusions based on gathered data and on sound scientific principles.

REQUIRED TEXTS, MATERIALS, & SUPPLIES

1. Young, Freedman, and Ford, University Physics with Modern Physics. 15th ed. WITH MASTERING PHYSICS REQUIRED
   You can get either the digital or hard cover versions if you have an unused Mastering code. We will be using it for online homework.
2. Scientific or graphing calculator. You may use Desmos or Wolfram Alpha during homework assignments.
3. Computer and Internet access.

4. Installed desktop Microsoft office. (Free via SMC)
5. Notebook and writing implement(s) (digital tablets are an acceptable option)

RECOMMENDED RESOURCES & SKILLS

Supplementary Texts

1. Adelson, Get ready for physics
2. McMullen, Essential Calculus-based Physics Study Guide Workbook: Laws of Motion, Volume 3

Computer Skills

To succeed in this course, you should have the ability to:

- Navigate the Internet using a web browser.
- Manage files using either the Mac or Windows operating systems.
- Send and receive email messages and attachments.
- Use a word processing program like Microsoft Word or its equivalent.
- Navigating Canvas: checking assignment deadlines, uploading work, and checking grades. Every assignment and exam will be hosted here. Check frequently for any updates to assignments.
- Use a spreadsheet program like Microsoft Excel or its equivalent for data analysis for labs.

METHODS OF PRESENTATION

- Lab, Lecture and Discussion, Experiments, Group Work, Observation, and Demonstration
- Other Methods: The methods of presentation used in this class reflect the importance of both a conceptual understanding of physics as well as the analytical mastery of the subject. Lecture and class-demonstrations, including computer simulations and videos, are used to introduce topics to students and to ground those ideas. Most experimental work not only reinforces core concepts but teaches experimental measurement techniques and the errors associated with them. Physics Education Research (PER) has shown that active engagement instructional strategies greatly improve student learning. As a result, collaborative learning activities are used in lecture and lab as part of the methods of presentation.

METHODS OF EVALUATION

- Unit Exams: Exams (3 @100 pts each) are mandatory and must be taken when scheduled. Exams will consist of 5 free-response problems that you fully work out. I will provide all physical constants that you will need, and you will make a **hand-written** formula sheet on a single 8.5-by-11-inch sheet of paper (both sides), printouts are NOT ALLOWED. Tests are **not** cumulative, but concepts build throughout the course. **The exam dates are 10/02, 10/23, and 11/13.** The exams will be 2 hour long and are given at the beginning of the class period.
- Final Exam: This is a cumulative exam that will be given during finals week. It will have 10 questions chosen from the entire course.
- Lab: Labs will be held on Fridays. The labs that we do will be posted onto Canvas. You are expected to read the week's lab ahead of time, so you can understand before we begin the lab. There will also be pre-labs due before class to prepare you for the day's work. The experiments can be finished more quickly if you come prepared. Lab reports will be due one week following the lab session, unless otherwise noted. During lab days, we will be breaking up into groups of 2 or 3. You will receive a 0 for any missed lab. I will drop your lowest lab score.
- Homework: You will be assigned between 20-30 problems each chapter. We will be using online homework via Pearson's Mastering Physics. You will be able to make unlimited attempts for each question without penalty. For full credit, you will also submit a scanned written hard copy (or answers written by hand on a digital tablet) to Canvas. Full reasoning for EACH question is required for full credit, "Rules for Homework" for details (INCLUDING multiple choice questions). Anticipate that you will require 6-10 hours to complete the homework each set. Homework will be due at **11:59 PM each Tuesday.**
- Textbook Notes: textbook notes will cover the material that will be covered in lecture that day, due midnight the night **before** the class. The textbook reading and note-taking help you come to lecture prepared and reduces time spent on homework. Completing textbook notes prepares you for the in-class work.
- In-class work: In-class work will be assigned in the class, at differing times in the lecture. We will be breaking up into groups of three (or two), randomly generated, to discuss and solve problems. You will generate a single document

(paper or digital) for the group and each group member will take turns writing, so each submission should have each group member's handwriting on it. After a discussion within your group, I encourage you to discuss your work across groups. We will then go over the problem together as a class. You will then upload your work in the class period. In-class work may be excused (with documentation) but cannot be made up.

- A grade of "Incomplete" may be granted at the very end of the term if an unforeseen event or illness prevents you from completing the final coursework and at the time you have earned a "C" or better. "Incomplete" grade situations are extremely rare, and are entirely at the discretion of the instructor, within the parameters set above.

Your final grade will be calculated using the following percentages:

Percentage of Grade:	Evaluation Method:
5%	Textbook Notes
8%	In-class work
20%	Lab Reports
12%	Homework
33%	Unit Exams
22%	Final Exam

GRADING SCALE

A = 90.0-100%
B = 80.0-89.9%
C = 65.0-79.9%
D = 55.0-64.9%
F = 54.9% and below

ATTENDANCE, DROPS, & WITHDRAWALS

You are responsible for maintaining your own enrollment status. You may drop the course with a withdrawal until Nov 17. It is NOT possible to drop the class that date. General information regarding drop dates, withdrawals, refunds, and other enrollment matters may also be found at the Admissions section of the SMC website. See Admissions Dates and Deadlines for the complete semester schedule including short term courses.

- Attendance is crucial to your success. The class may cover material that is not discussed or found elsewhere, so you will miss out on an essential part of the learning process if absent. Regular attendance is required of every student. You should attend every class, but extenuating circumstances arise that can make this difficult. If you cannot attend a class, please let me know. If circumstances make you miss more than 3 classes during the semester, you may be overextended. I ask that you come see me to discuss your options. Missing 4 class sessions MAY lead you to be dropped from the course.
- Monday Sep 09 is the last day to withdraw to Receive a Refund. Sunday, Sep 22 is the last day to withdraw with no grade showing on your permanent record. Sunday, Nov 17 is the last day to withdraw from this class with a grade of W. The last day to request for a pass/no pass grade is Monday Dec 16.
- **The date of the final is Monday 12/16 at 8 AM–11 AM**

MISSED AND LATE WORK

- Late work homework is accepted up until the unit exam covering the material, but there is a deduction equal to 20% of the assignment. In addition to wanting to avoid the grade penalty, you should make every effort to submit all work by its deadline so you can receive the prompt feedback and grade that are an essential part of the learning process and success in college. Late textbook notes and in-class work is not accepted but may be excused with documented extenuating circumstances.
- When absent, you are still responsible for completing and submitting all work on time; however, if you have a documented extenuating circumstance that prevents the timely submission of work, please speak to me as soon as possible to receive an accommodation with a new reasonable deadline.
- Tests are mandatory and must be taken when scheduled. Under compelling circumstances with documentation, they can be made up.

EXTRA CREDIT

You may choose ONE of the following extra credit options. The points will be added to the exam section of your grade.

- You may attend a Distinguished Scientist Lecture and write a two-page analytical reflection paper connecting what you learn at the event to your class materials for up to 10 extra credit points. (You may also watch recorded lectures of scientists, subject to the professor's approval).
- You may participate in the Sustainable Works program for up to 10 extra credit points. For more information visit the Sustainable Works site.

CLASSROOM POLICIES

Class Participation

- Learning is a collaborative exercise; this classroom is your space too! Everyone belongs here, no matter your background. I highly encourage you to be "wrong" here; it is how we learn! If you already knew everything, you wouldn't need me! Sometimes, active participation can feel uncomfortable, particularly if you are unsure of the "answers." One of the themes of this course, as I teach it, is that science (really all knowledge) is a process more than a set of facts. Like a learning a musical instrument, practicing helps us to become better scientists!
- All of us in the class, you, me, your peers, have a responsibility to create an environment in which we can all learn from each other. I expect everyone to participate in class so that we can all benefit from the insights and experiences that each person brings.
- During lab time, all group members are expected to contribute equally. Before beginning the lab, you will decide among you who will be doing which roles and write them at the top of the lab worksheet. I will be periodically checking in on everyone throughout the lab period. If you do not contribute your portion of work during a lab, you will receive a zero for that lab. If you would like help, do not hesitate to ask me BEFORE the end of the lab.
- Learning doesn't stop after the class ends; you should all use the course Discord. You should use it to pose homework questions and answer questions of your peers. You can also use it to coordinate in-person and Zoom study groups with each other.

Classroom Environment

- Please ask questions during class
- This classroom is welcoming to all. I expect everyone to be respectful in how they communicate and interact with every person in this class. Racist, sexist, homophobic, and other forms of language that potentially marginalize or demean any student are not tolerated.
- In this class we will be sharing multiple perspectives. Please remember to be respectful with one another.
- Please refrain from having side-conversations during the lecture portions of the class. We will be having several periods for discussions during class time.
- You are expected to follow all Codes of Conduct as established by Santa Monica College. These documents can be reviewed at the Student Judicial Affairs webpage. See the rules for Student Conduct (AR 4410), Code of Academic Conduct (AR 4411), Student Honor Code (AR 4412).

Electronic Devices

- During the lecture time of the class, the use of electronic devices such as laptops, and smartphones are **NOT** permitted. You may use tablets or foldable laptops with a writing surface that are face-up and in "note-taking" mode. During lab and group work time, laptops are permitted; however, to maximize participation and learning, this usage is limited to activities supporting concurrent class activities.
- Cell phones and other electronic devices should be on silent mode during class time. Put all electronics on "do not disturb" mode during class to create a good learning environment for everyone.

Food & Drink

Food or drink is prohibited in the classroom except for water bottles, which are permitted if they remain closed when not in active use and are kept away from all equipment.

Recording of Class Lectures

In accordance with Section 78907 of the California Education Code, students shall not use any electronic listening or recording device in any classroom without the prior consent of the instructor, except as necessary to provide reasonable auxiliary aids and academic adjustments to disabled students.

Lab Reports

- We will be completing 12 labs this semester 2 of which we will write out full reports. For the other 10 labs, your will complete the worksheets and turn one week later. The worksheets will be worth 50 points.
- For the full reports, you will have 4 weeks to complete a 4-page, two-column, single-space, size-10 font report. A sample report is provided. The report will be worth 150 points.
- The report should have an introduction/abstract, materials and methods, experimental results, discussion and analysis, and a conclusion sections, clearly marked. If there are extensive derivations of equations, you should also add a theory section.
- You must use the data you gather for your lab report.
- You may discuss the experiment with your lab partner and other classmates, but the lab report that you turn in must be your own work. Lab reports are subject to all the rules governing academic honesty.
- Complete details are provided by "Guidelines for a Physics Lab Report."

Homework

- We will be using online homework via Pearson's Mastering Physics. You will be able to make unlimited attempts for each question with no penalty.
- While you are completing the homework, you should write out your reasoning: for simple conceptual questions, a couple of sentences; for longer problems full reasoning, see below.
- The homework in this class can be rather challenging. Anticipate that you will require 6-10 hours to complete the homework each chapter. You will likely need assistance with at least two or three problems per assignment.
- To ensure that you have enough time available to seek assistance, begin working on the problem sets as soon as possible.
- I encourage you to work with other students to complete homework problems and lab reports. I do expect that each student turn in their own individual work. You are required to turn in a copy of your own handwritten work onto Canvas. See "Rules For Homework" for expectations.
- If you are unable to do a problem, you may post online for other students help, email me to ask for help (see contact information above), or go to office hours. There are also FREE tutors offer via SMC, (https://www.smc.edu/student-support/academic-support/tutoring-centers/index.php) and see below.
- Learning doesn't stop after the class ends; you should all use the course Discord. You should use it to pose homework questions and answer questions of your peers. You can also use it to set up Zoom study groups with each other.

Rules For Homework

I want to you to treat each homework problems with the same level of care as you would on an exam. Here, I give a general outline of the rules you should use for your homework assignments. For each type of problem, I will create a guide on how to set-up and solve that problem.

1. General Appearance of Assignment
   a. Handwriting should be neat, legible, and reasonably dark. If the image contrast is not high enough, you will need to re-upload your document. Do not write on both sides if your graphite/ink bleeds through.
   b. Your homework should be logically organized and easy to follow.
   c. Problems must be written in exactly the order assigned. That is, problem 1 should be solved first, then problem 2, etc.
   d. You **must** submit your handwritten work to the "assignment" on Canvas for credit.
   e. For each assignment please only create **ONE** pdf with your favorite scanning software or app.

2. **You may write only one equation or statement per line.** After you have written one equation on a line, go to the next line to write the next equation. If you write small and find this wasteful, you may draw a line down the middle of your paper to make two columns, and then begin working down the right side of the paper after you have completely used up the left side.

3. The following steps must be followed when STARTING a homework problem:
   a. Draw a diagram which presents all information given in the statement of the problem. The diagram must be large enough for all important information to be represented clearly. It should be clear what type of problem you are solving based on your sketch alone. Any symbolic variables that appear in your math (such as x, t, F, etc.) <u>must</u> either appear in the diagram or be listed next to the diagram.

b. If appropriate, use your diagram to define a coordinate system by drawing coordinate axes or noting which direction is positive.
c. If information is given as a numerical value (such as 3.0 m, 12.0 s, 8.0 N, etc.), a symbol (such as *x*, *t*, *F*, etc.) must be assigned to the numerical value. For example, if a problem says that a box has a mass of 3.0 kg, you should write "*m* = 3.0 kg" (if you have more than one use subscripts: m_A, m_B, etc.) on your paper, on or next to the diagram. Do not simply write "3.0kg"; assign a symbol and write "*m* = 3.0kg". Use a single letter for each numerical value.

4. To begin COMPUTATION: Start your solution by stating one or more equations you have seen either in lecture or in the text (e.g., $F = ma$, $\Delta x = v_{av}\Delta t$, etc.) that is appropriate to the problem at hand. The first equation in a problem should NEVER have numerical values plugged into it; it should be strictly in "variable" form.

5. When FINISHING a problem: If you have an equation in which the variable you are trying to solve for appears, and all other quantities are known, follow the following steps:
   a. WITHOUT PLUGGING IN NUMBERS, isolate the variable. Exceptions: (1) You may always plug in zero. (2) When you have obtained a quadratic equation, you may work out numerical values for the coefficients, and then plug numerical values for the coefficients into the quadratic formula.
   b. Once you have an equation in which the variable is isolated on one side, plug numerical values (if given) into the quantities on the other side of the equation. **When you plug numerical values into an equation, you must include units with the numerical values.** (See item 8, below.)
   c. Compute the numerical value of the quantity of interest.

6. USE THE CORRECT UNITS.
   a. Every numerical answer must include the correct unit.
   b. Any time a number representing a physical quantity appears in a solution, units must be included. Do not insert numbers into an equation without inserting the accompanying units.

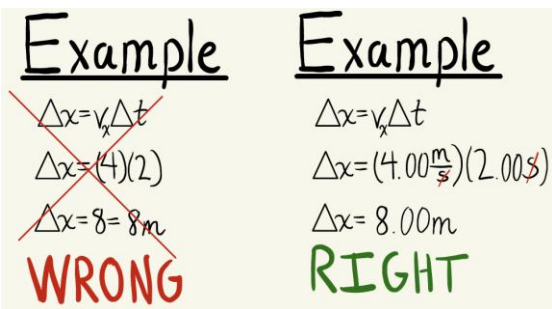

   c. Check to make sure that the correct unit for your answer follows from the computation; do not just "tack on" the correct unit at the end of the problem. This generally requires a simple computation. An example follows:

Example: Suppose you wish to compute the acceleration of a 5-kg object subject to a single 10-N force. You would write:

$$\Sigma F_x = m a_x$$

$$a_x = \frac{\Sigma F_x}{m} = \frac{10.0\,N}{5.00\,kg} = \frac{10.0\,kg\,m/s^2}{5.00\,kg} = 2.00\,m/s^2$$

Notice that expanding the derived unit newton "N" into the base units of "kg·m/s^2" allows you to cancel the "kg", leaving m/s^2, which is the correct unit for acceleration.

Example of Homework Presentation

The following examples illustrate the use of Homework Rules.

Problem 1:
A jogger is running in a straight line from point A to point B, which are separated by 200. m. He maintains a constant speed of 4.00 m/s. If the jogger is presently 50.0 m from A (and 150 m from B), and his stopwatch reads 20.0 s, what will be the reading on his stopwatch when he reaches B?

Identify:

This is a 1D Kinematics problem.
The jogger has constant velocity.

Set Up:

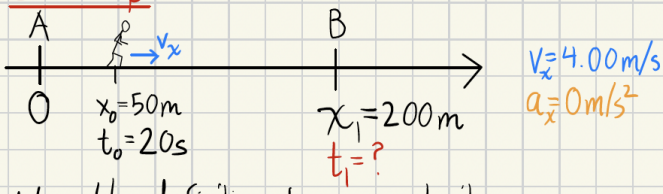

Use the definition of average velocity

$$v_{av\text{-}x} = \frac{\Delta x}{\Delta t} = \frac{x_1 - x_0}{t_1 - t_0} = v_x$$ because the x-velocity is constant

Execute:

So: $v_x = \frac{x_1 - x_0}{t_1 - t_0}$ solve for t_1

$$v_x(t_1 - t_0) = x_1 - x_0$$

$$t_1 - t_0 = \frac{x_1 - x_0}{v_x}$$

$$t_1 = t_0 + \frac{x_1 - x_0}{v_x}$$

$$t_1 = 20.0s + \frac{200.0\cancel{m} - 50.0\cancel{m}}{4\cancel{m}/s}$$

$$t_1 = 20.0s + 37.5s$$

$$\boxed{t_1 = 57.5s}$$

Dimensional Analysis

$$\frac{\cancel{m}}{\cancel{m}/s} = \frac{1}{1/s} = s$$

Evaluate: Running 150m ~ 1.5 football fields in about a minute is a reasonable time to run that that distance.

Problem 2: Two cars travel on the parallel lanes of a two-lane road. The cars' motions are represented by the position versus time graph shown in the figure. Answer the questions using the times from the graph indicated by letters.
A) At which of the times do the two cars pass each other?
B) Are the two cars traveling in the same direction when they pass each other?
C) A which of the lettered times, if any, does car #1 momentarily stop?
D) A which of the lettered times, if any, does car #2 momentarily stop?
E) At which of the lettered times are the cars moving with nearly identical velocity?

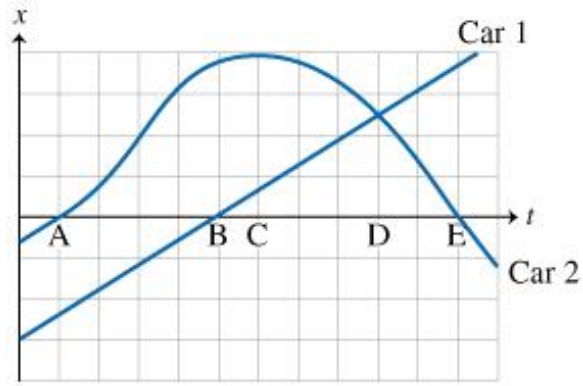

A) The two cars pass each other at D, because that is the instant that both cars have the same value of x.
B) No; at point D, the slope of car 1 is positive (so it it is moving in the positive direction) and the slope of car 2's curve is negative (so it is moving in the negative direction.
C) None; the curve of car 1 has a constant positive slope, so its velocity is never zero (and doesn't stop).
D) At point C, the slope of car 2's curve is zero, so it momentarily comes to a stop.
E) At point A, the curves of car 1 and 2 are momentarily parallel, so at that instant so have nearly identical velocity.

ACADEMIC HONESTY

The SMC Honor statement, signed by each student upon enrollment, reads: "In the pursuit of the high ideals and rigorous standards of academic life, I commit myself to respect and uphold the Santa Monica College Honor Code, Code of Academic Conduct, and Student Conduct Code. I will conduct myself honorably as a responsible member of the SMC community in all endeavors I pursue." Please be extremely careful that you do not engage in any behavior that could even be construed as cheating. Violations could result in failing grades, reports to the Campus Disciplinarian, and subsequent academic disciplinary action. Examples of behaviors that are

not permitted include but are not limited to: inappropriate language or physicality in the classroom, and inappropriate behaviors during an exam (talking with another student, looking at or copying from another student's paper, using a disallowed electronic device or calculator, using disallowed notes, leaving the room without prior permission, removing exam materials from the classroom).

ACCOMMODATIONS FOR DISABILITIES

I encourage students requesting disability-related accommodations to contact the Center for Students with Disabilities as soon as possible. I will work with you and the Center for Students with Disabilities to provide appropriate and reasonable accommodations. An early notification of your request for test-taking and/or other accommodations is necessary to ensure that your disability-related needs are addressed appropriately; testing accommodations cannot be applied retroactively.

The Center for Students with Disabilities is located on the first floor of the Student Services Center, and the phone number is (310) 434-4265 or email at dsps@smc.edu Additional Contact Information can be found at the Center for Students with Disabilities website.

EMERGENCY PREPAREDNESS & SAFETY

The safety of students at SMC is a priority. In the event of an emergency, you should contact the SMC Police Department (310-434-4300).

Please note that emergency procedures are posted in this classroom and every classroom. Please take the time to familiarize yourself with these procedures today, when knowledge of what to do can be the most effective. Also, procedures for various emergencies are delineated on the SMC Emergency Preparedness website.

We strongly encourage everyone to use the LiveSafe mobile app that Santa Monica College is providing to all students, faculty, and staff to download for free. The app provides a quick, convenient, and discreet way to communicate directly with Santa Monica College officials, enhancing your overall safety and allowing Santa Monica College to better serve you. Please use the app to anonymously report any acts of vandalism you may observe.

EMOTIONAL SUPPORT

Over the course of the semester, you may face difficult circumstances beyond your control, such as strained relationships, increased anxiety, alcohol/drug problems, feeling down or depressed, or having difficulty concentrating. Having any of these challenges may create barriers to learning or may make it difficult for you to meet some of the course requirements. If you or someone you know is suffering these or other similarly difficult circumstances, please reach out for support. The staff and faculty of Santa Monica College want you to succeed academically and care about your wellbeing. You may contact the college's Center for Wellness and Wellbeing (LA 110, 310-4344503), which provides short-term mental health services, community referrals, and a 24/7 emotional support line 800-691-6003. Or, if the situation is an emergency, you may contact the SMC Police Department (310-434-4300 or the SMC LiveSafe app). Also, please feel you can contact me so that I can help to direct you to support services on campus that might be most beneficial to you.

EQUITABLE LEARNING ENVIRONMENT

Santa Monica College is an intellectual community enriched and enhanced by diversity along a number of dimensions, including race, ethnicity and national origins, gender and gender identity, disability, sexuality, class and religion. We are especially committed to increasing the representation of those populations that have been historically minoritized in U.S. higher education.

GENDER EXPRESSION AND IDENTITY

I will gladly honor your request to address you by an alternate/preferred name or gender pronoun. Please advise me of this preference early in the semester or session so that I may make appropriate changes to my records. I will do my best to address and refer to all students accordingly and support classmates in doing so as well.

TITLE IX (SEX DISCRIMINATION)

Title IX is a comprehensive federal law that prohibits discrimination on the basis of sex in any federally funded education program or activity: No person in the United States shall, on the basis of sex, be excluded from participation in, be denied the benefits of, or be subjected to discrimination under any education program or activity receiving federal financial assistance.
Those interested in the details should view the Title IX Legal Manual.

Students who have experienced some form of sexual misconduct or discrimination are encouraged to talk to someone about their experience, so they can get the support they need. You can learn more about available support at the Student Services Title IX webpage.

UNDOCUMENTED/DACA/AB540

Santa Monica College stands with the California Community Colleges Chancellor's Office—and hundreds of other educational and business organizations—in affirming that our undocumented students are as integral a part of our community as anyone else. Here at Santa Monica College, we remain committed to serving our undocumented students, to helping them fulfill their life's dreams and aspirations; this college will continue to be a safe environment for all students and personnel. We will work to provide the greatest support to students affected by this decision, and campus and student leaders alike have already rallied in solidarity as well as to provide resources. SMC joins the Chancellor's Office and all the other voices that will advocate determinedly in Congress for an effective solution to this issue, to end a cruel and unnecessary action that goes against the interests of local communities and our country at large.

The **Santa Monica College DREAM Program** provides support services to DREAMers (undocumented, AB540 and DACA recipients). Its purpose is to increase the personal growth, development and retention of DREAM students through academic, career, and personal counseling; assistance in applying for the California Dream Act/Financial Aid and scholarships; and providing workshops relative to DREAMers and their families. The Dream Program is located in the Student Services Center (SSC) 2nd Floor, Room 238. To make an appointment, call (310) 434-4892 or email DREAM@smc.edu.

STUDENT SUCCESS

Academic Counseling
The Counseling Department at SMC can help you with choosing and enrolling in classes, educational and career planning, navigating Corsair Connect, understanding financial aid, referrals to campus resources, and more.

Black Collegians
The Black Collegians Program/Umoja Community at SMC is designed to assist students of African descent in transferring to four-year universities and obtaining their associate degree. They offer services to help students become academically competitive and to set personal goals.

Extended Opportunity Program & Service (EOPS)
Extended Opportunity Program & Services (EOPS) at Santa Monica College is a program that supports the enrollment, retention, graduation, and transfer of students who are challenged by economic and educational disadvantages. They offer service such as academic, career, personal and transfer counseling; priority registration; supplemental textbook assistance; one-on-one tutoring; and much more.

Latino Center/Adelante
The Adelante Program is a success-oriented program focusing on academic achievement, transfer, cultural awareness, and personal growth. Adelante classes emphasize verbal, written, and critical thinking skills essential to college success. Classes accentuate the Latino experience within the context of the course subject, and most classes offer credits that are transferable to the UC and CSU systems.

Student Health Services Center
The SMC Health Services Center provides primary health care services to currently enrolled Santa Monica College students who have paid the California State mandated health fee. It focuses on health promotion, illness prevention, referrals, health and nutrition education. The staff consists of two registered nurses, a registered dietitian, two health assistants, and a nurse practitioner. The Center is located on the northeast corner of the Cayton Center Complex.

Tutoring
Free tutoring centers are available across the campus. There are dedicated centers for Business, CSIS, ESL, Math, Modern Languages, Science, and Writing & Humanities tutoring. For more information about their hours and locations, visit the SMC Tutoring Services Webpage.

Veterans Resource Center
The Veterans Resource Center at Santa Monica College serves veterans entering college for the first time or returning to college to further their education. The office acts as a liaison with the Veterans Administration verifying enrollment for students claiming benefits under the G.I. Bill or the Veterans' Vocational Rehabilitation Program. It also can also assist the veteran with referrals to various veteran-serving programs in the West Los Angeles area. If you would like additional information, please call (310) 434-8205.

STUDENT SERVICES CENTER

Located at the North end of campus on the corner of Pico and 20th street.

- Admissions & Records
- Black Collegians
- CalWORKs
- Care & Prevention Team
- Career Services Center
- Cashier's Office
- Center for Students with Disabilities
- Counseling
- Distance Education
- DREAM Program
- EOPS/CARE
- Financial Aid & Scholarships
- Guardian Scholars
- High Tech Center
- Institutional Research
- International Education Center
- Latino Center
- Pico Partnership
- Scholars Program
- Student Judicial Affairs
- Success & Engagement Center
- Transfer Counseling Center
- Welcome Center

DISCLAIMER

Some elements of the syllabus may be changed at the instructor's discretion. Students will be given at least 48 hours notice of changes whenever possible. If there is any aspect of this syllabus which you do not understand, or to which you take exception, please let the instructor know within the first week of class. Your continued attendance in this course constitutes an acknowledgement and acceptance of the requirements delineated in this syllabus.

Week #	Date (Monday)	MONDAY	TUESDAY	WEDNESDAY	THURSDAY	FRIDAY
1	08-26	Introduction LECTURE Chapter 12.1-12.2		LECTURE Chapter 12.3-12.4		LECTURE Chapter 12.4-12.5 EXP #1 Archimedes' Principle and Buoyancy
2	09-02	**LABOR DAY HOLIDAY**		LECTURE Chapter 12.6		LECTURE Chapter 12.6 EXP #2 Torricelli's Equation and Equation on Continuity
3	09-09	LECTURE Chapter 15.1-15.2 (Refund Deadline)		LECTURE Chapter 15.3-15.4		LECTURE Chapter 15.4-15.5
4	09-16	LECTURE Chapter 15.6-15.7		LECTURE Chapter 15.7-15.8		LECTURE Chapter 15.7-15.8 EXP #3 Frequency of Transverse Standing Waves
5	09-23	LECTURE Chapter 16.1-16.3 DROP DEADLINE! (09/24 without W)		LECTURE Chapter 16.4-16.6		LECTURE Chapter 16.7-16.9 EXP #4 The Speed of Sound (with the resonance of longitudinal waves)
6	09-30	LECTURE Chapter 17.1-17.3		**EXAM 1** **CH 12, 15-16** Chapter 17		LECTURE Chapter 17.4-17.7 EXP #5 Thermal Expansion (FULL REPORT)
7	10-07	LECTURE Chapter 18.1-18.4		LECTURE Chapter 18.5-18.6		LECTURE Chapter 19.1-19.2 EXP #6 Latent Heat of Fusion of Ice
8	10-14	LECTURE Chapter 19.3-19.5		LECTURE Chapter 19.6-19.7		LECTURE Chapter 19.7-19.8 EXP #7 Ratio of Heat Capacities for Air (FULL REPORT)

9	10-21	LECTURE Chapter 20.1-20.2		**EXAM 2 CH 17-18** Chapter 20		LECTURE Chapter 20.3-20.4 EXP #8 Heat Engine
10	10-28	LECTURE Chapter 20.5-20.6		LECTURE Chapter 20.7-20.8		LECTURE Chapter 33.1-33.3 EXP #9 Entropy Statistical Interpretation
11	11-04	LECTURE Chapter 33.4-33.6		LECTURE Chapter 33.7 Chapter 34.1-34.2		LECTURE Chapter 34.3-34.4 EXP #10 Pfund Refraction
12	11-11	**VETERANS DAY**		**EXAM 3 CH 19-20**		LECTURE Chapter 34.5-34.6 EXP #11 Curved Mirrors and Lenses
13	11-18	LECTURE Chapter 34.7-34.8 DROP DEADLINE! (11/17 with W)		LECTURE Chapter 34 Practice Problems	**THANKSGIVING**	**NATIVE AMERICAN HERITAGE DAY**
14	11-25	LECTURE Chapter 35.1-35.2		LECTURE Chapter 35.3-35.4		LECTURE Chapter 35.4-35.5 EXP #13 Thin Film Interference
15	12-02	LECTURE Chapter 36.1-36.3		LECTURE Chapter 36.3-36.5		LECTURE Chapter 36.6-36.7
16	12-09	LECTURE Chapter 36.8 Review	FINAL EXAM WEEK	FINAL EXAM WEEK	FINAL EXAM WEEK	FINAL EXAM WEEK
17	12-16	**FINAL EXAM** **8–11 AM**	FINAL EXAM WEEK			

Exam 1
Physics 21

Chapters 1 – 3

Name:

_____

Your test has 5 problems, each worth 20 points.

Some useful constants:
Acceleration due to gravity: $g = 9.80\ m/s^2$

1. Consider the measurements of a circular cylinder using vernier calipers and a triple beam balance. (Diagrams on next page) The main scale unit of the calipers is centimeters and the triple balance scale is grams.
    a. What are the measurements for the diameter, length, and mass (include uncertainties)
    b. Find the TOTAL surface area of the cylinder
    c. Find the volume of the cylinder.
    d. The density of the cylinder.

Make sure to **propagate uncertainty** for the derived values in (b), (c), and (d) (like in the lab) and round to the correct number of significant figures. Absolute propagated uncertainties should be only one digit.

Diameter:

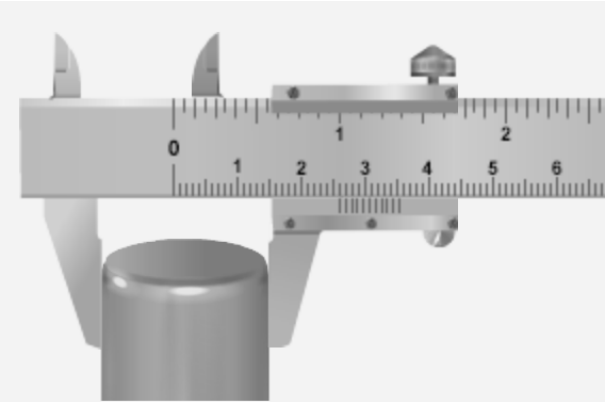

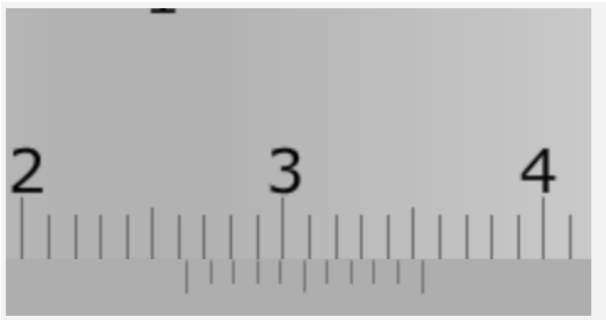

Length:

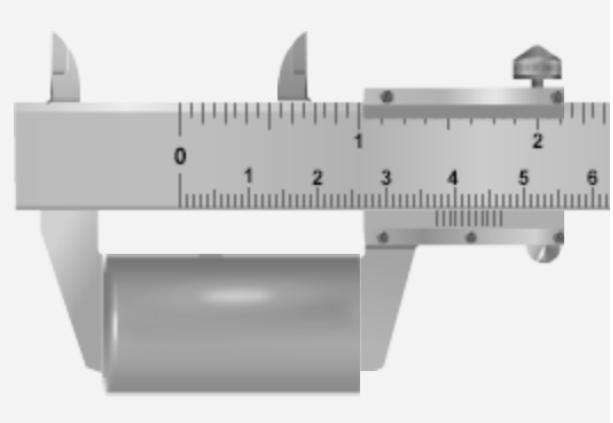

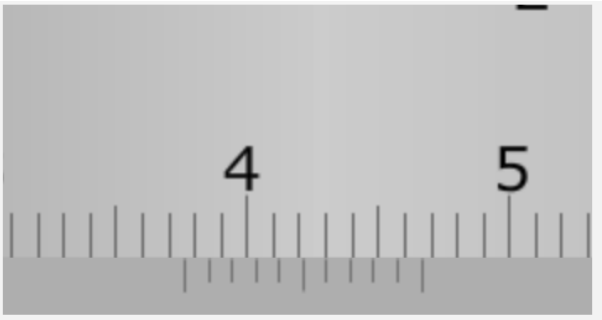

Mass

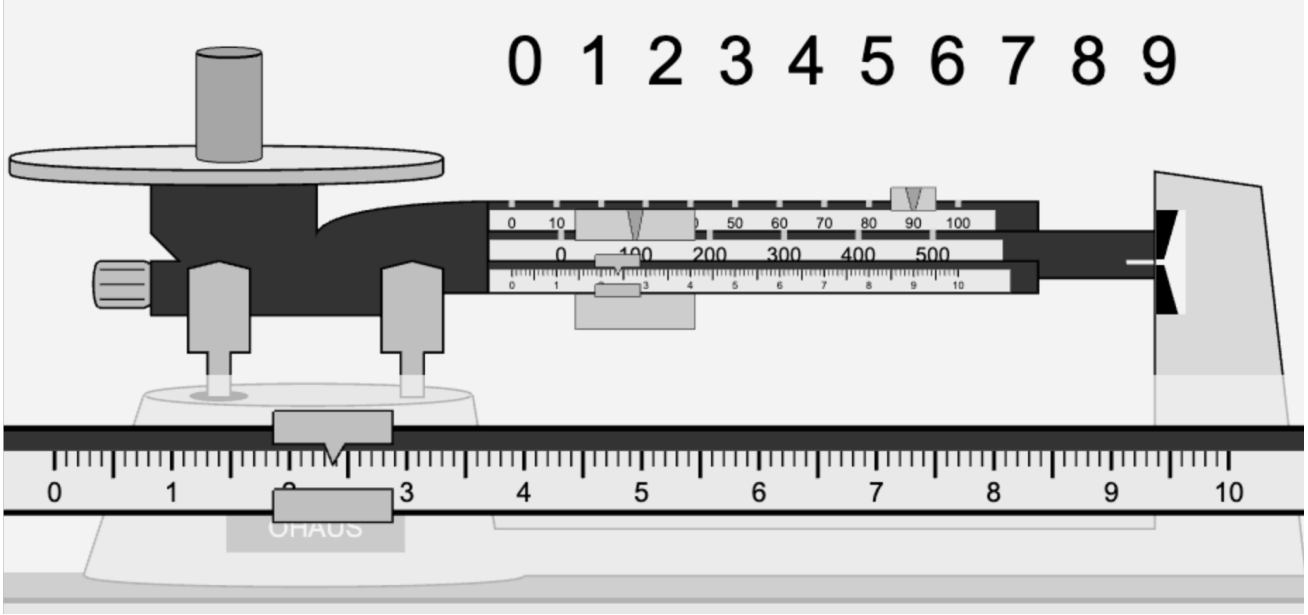

2. A spelunker is surveying a cave. She follows a passage 180 m straight west, then 210 m in a direction 45° east of south, and then 280 m at 30° east of north. After a fourth displacement, she finds herself back where she started. Use the method of components to determine the magnitude and direction of the fourth displacement in the following steps.
    a. Draw a vector diagram representing the exploration so far, using the tip-to-tail or parallelogram method. Give each displacement vector a name.
    b. Draw a coordinate axis to represent North, South, East, and West.
    c. break each vector into components along that coordinate axis.
    d. What is the spelunker's total displacement from their starting point in components (before the fourth displacement)?
    e. To return to the starting point, the spelunker travels _____ m away at an angle of _____ measured from east.

3. The engineer of a passenger train traveling at 25.0 m/s sights a freight train whose caboose is 200 m ahead on the same track. The freight train is traveling at 15.0 m/s in the same direction as the passenger train. The engineer of the passenger train immediately applies the brakes, causing a constant acceleration of 0.100 m/s^2 in a direction opposite to the train's velocity, while the freight train continues with constant speed. Take $x = 0$ m at the location of the front of the passenger train when the engineer applies the brakes.

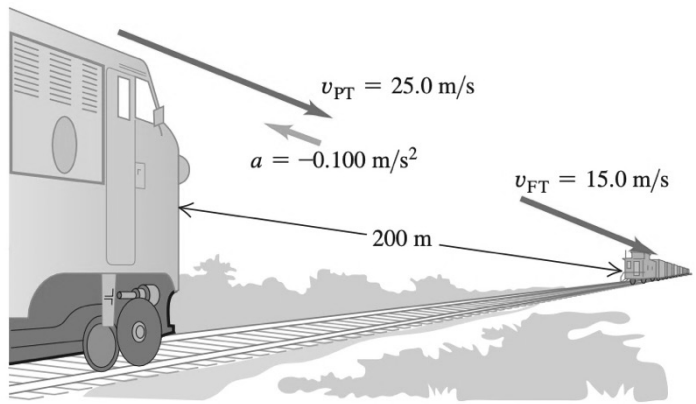

Figure 1:The passenger train beginning to apply the brakes, the freight train caboose is 200 m ahead.

   a. Will the cows nearby witness a collision?
   b. If so, where will it take place?
   c. On a single graph, sketch the positions of the front of the passenger train and the back of the freight train.

Find these in the following steps:

   i. Draw a clear motion diagram illustrating the problem.
   ii. Draw a coordinate system, with a clearly marked origin.
   iii. Identify and number the moments of interest (make sure to draw any vectors that are constant on the side)
   iv. Write the kinematic variables for each moment of interest and fill in the known kinematic variables.
   v. Write down the equations you will use to solve the equation for the unknown variables.
   vi. Solve the equations via algebra (do NOT plug in numbers for a variable unless that number is zero)

Use the back of this page to do your work.

Workspace for problem 3.

4. An airplane pilot sets a compass course due west and maintains an airspeed of 220 km/h. After flying for 0.500 h, she finds herself over a town 120 km west and 20 km south of her starting point. Find the wind velocity (magnitude and direction).

Find these in the following steps:

i. Draw a diagram of the plane, air, and Earth.
ii. Clearly identify the velocity vectors and **the frame they are measured in.**
iii. Find the target variable.
iv. Set-up the equation(s) and/or tables you need to solve.

(Hint: the vectors DON'T form a right triangle)

5. During a storm, a car traveling on a level horizontal road comes upon a bridge that has washed out. The driver must get to the other side, so he decides to try leaping the river with his car. The side of the road the car is on is 21.3 m above the river, while the opposite side is only 1.8 m above the river. The river itself is a raging torrent 48.0 m wide.
    a. How fast should the car be traveling at the time it leaves the road in order just to clear the river and land safely on the opposite side?
    b. What is the speed of the car just before it lands on the other side?
       Find these in the following steps:
        i. Draw a clear motion diagram illustrating the problem.
        ii. Draw a coordinate system, with a clearly marked origin.
        iii. Identify and number the moments of interest (make sure to draw any vectors that are constant on the side).
        iv. Write the kinematic variables for each moment of interest and fill in the known kinematic variables.
        v. Write down the equations you will use to solve the equation for the unknown variables.
        vi. Solve the equations via algebra (do NOT plug in numbers for a variable unless that number is zero).

Extra Space/Scratch work

Exam 2
Physics 21

Version A

Chapters 4 – 6

Name:

_____

Your test has 5 problems, each worth 20 points.

Some useful constants:

Acceleration due to gravity: $g = 9.80\ m/s^2$

1. You place a book of mass 5.00 kg against a vertical wall. You apply a constant force F to the book, where F = 96.0 N and the force is at an angle of 60.0° above the horizontal. The coefficient of kinetic friction between the book and the wall is 0.300. If the book is initially at rest, what is its speed after it has traveled 0.400 m up the wall?
   (Use Newton's Laws for this problem)

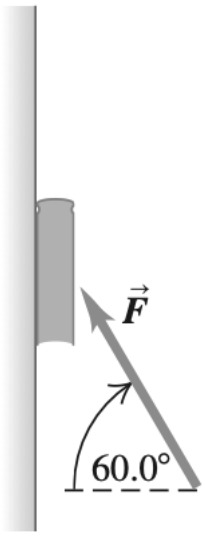

2. The two blocks in the figure are sliding down the incline, each with different coefficients of friction.
    a. What is the tension in the massless string?
    b. What is the acceleration of the blocks?

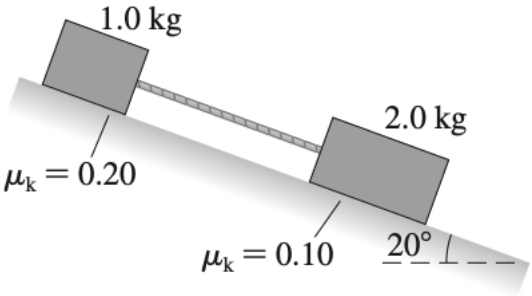

3. A racetrack curve has radius 120.0 m and is banked at an angle of 18.0°. The coefficient of static friction between the tires and the roadway is 0.300. A race car with mass 900 kg rounds the curve with the minimum speed needed to not slide down the banking.
    a. As the car rounds the curve, what is the normal force exerted on it by the road?
    b. What is the car's speed?

4. A 5.00 kg block is released from rest on a ramp that is inclined at an angle of 60.0° below the horizontal. The initial position of the block is a vertical 2.00 m above the bottom of the ramp.
    a. If the speed of the block is 5.00 m/s when it reaches the bottom of the ramp, what was the work done on it by the friction force?
    b. If the angle of the ramp is changed but the block is released from a point that is still 2.00 m above the base of the ramp, both the magnitude of the friction force and the distance along the ramp that the block travels change. If the angle of the incline is changed to 50.0°, does the magnitude of the work done by the friction force increase or decrease compared to the value calculated in part (a)?
    c. How much work is done by friction when the ramp angle is 50.0°?

5. A small block with a mass of 0.0600 kg is attached to a cord passing through a hole in a frictionless, horizontal surface. The block is originally revolving at 0.40 m from the hole with a speed of 0.70 m/s. The cord is then pulled from below, shortening the radius of the circle in which the block revolves to 0.10 m. At this new distance, the speed of the block is 2.80 m/s.

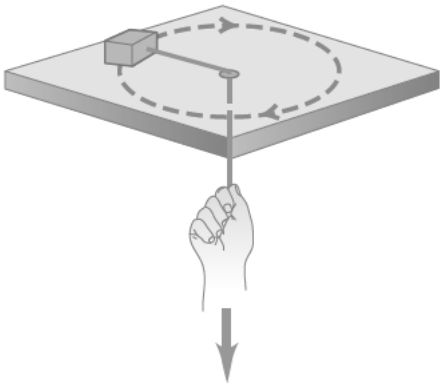

   a. Draw a free-body diagram of the block.
   b. What is the tension in the cord in the original situation when the block has speed $v = 0.70$ m/s?
   c. What is the tension in the cord in the final situation, when the block has speed $v = 2.80$ m/s?
   d. How much work was done by the person who pulled on the cord?

Exam 3
Physics 21

Chapters 7 – 10

Name:

_____

Your test has 5 problems, each worth 20 points.

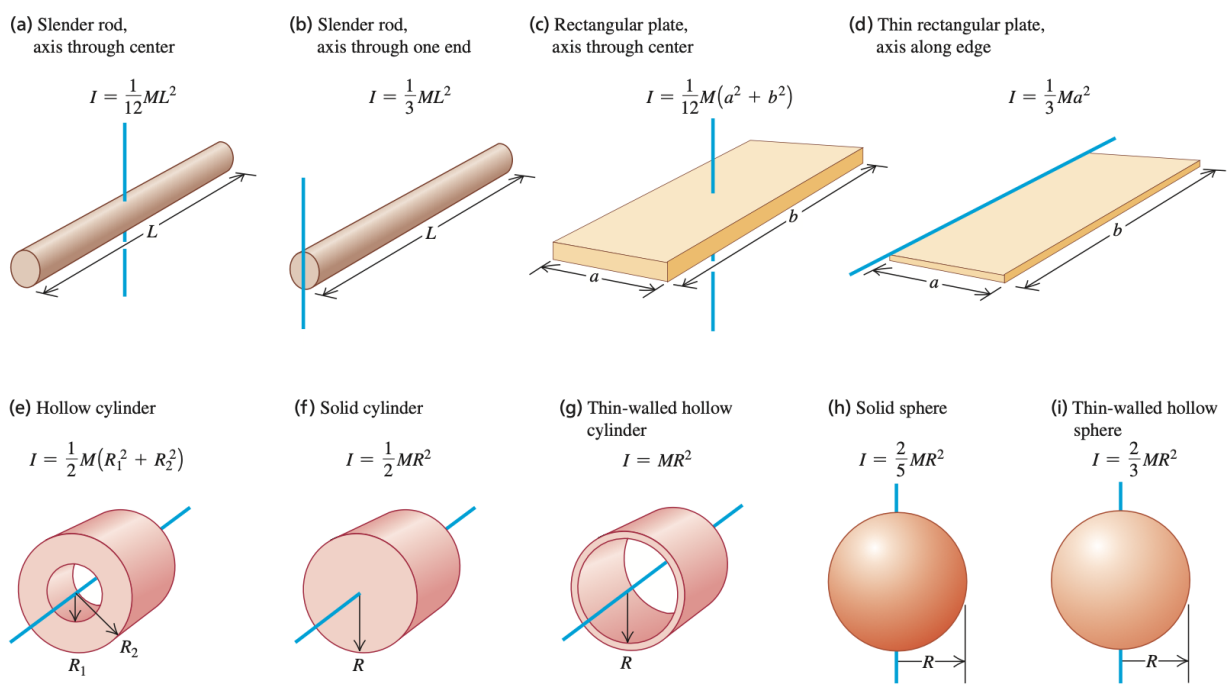

1. A 15.0 kg stone slides down a snow-covered hill, leaving point A at a speed of 10.0 m/s. There is no friction on the hill between points A and B, but there is friction on the level ground at the bottom of the hill, between B and the wall. After entering the rough horizontal region, the stone travels 100 m and then runs into a very long, light spring with force constant 2.00 N/m. The coefficients of kinetic and static friction between the stone and the horizontal ground are 0.20 and 0.80, respectively.
   a. What is the speed of the stone when it reaches point B?
   b. How far will the stone compress the spring?
   c. Will the stone move again after it has been stopped by the spring?

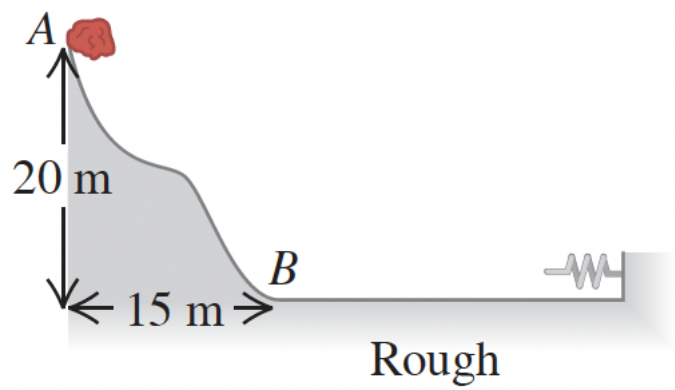

2. In a shipping company distribution center, an open cart of mass 50.0 kg is rolling to the left at a speed of 5.00 m/s. Ignore friction between the cart and the floor. A 15.0 kg package slides down a chute that is inclined at 37° from the horizontal and leaves the end of the chute with a speed of 3.00 m/s. The package lands in the cart and they roll together. If the lower end of the chute is a vertical distance of 4.00 m above the bottom of the cart:
    a. What is the speed of the package just before it lands in the cart?
    b. What is the final speed of the cart and the package together?

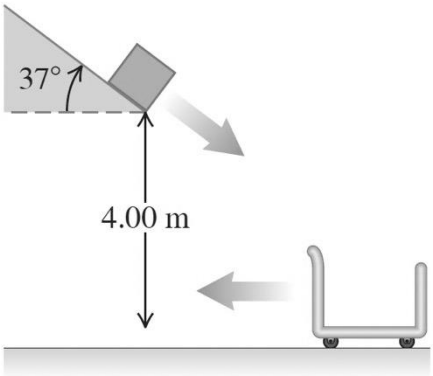

3. A thin-walled, hollow spherical shell of mass m and radius r starts from rest and rolls without slipping down a track. Points A and B are on a circular part of the track having radius R. The diameter of the shell is very small compared to h_0 and R, and the work done by rolling friction is negligible.
    a. What is the minimum height h_0 for which this shell will make a complete loop-the-loop on the circular part of the track?
    b. How hard does the track push on the shell at point B, which is at the same level as the center of the circle?
    c. Suppose that the track had no friction and the shell was released from the same height h_0 you found in part (a). Would it make a complete loop-the-loop? How do you know?
    d. In part (c), how hard does the track push on the shell at point A, the top of the circle? How hard did it push on the shell in part (a)?

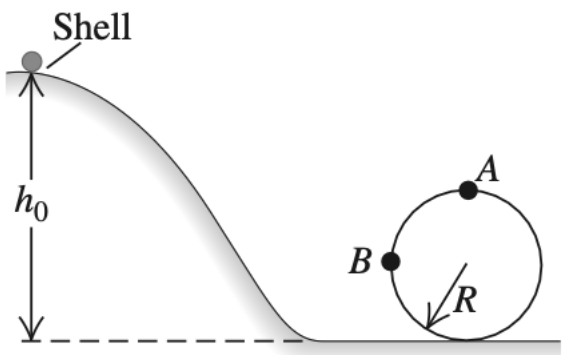

4. Two metal disks, one with radius R_1 = 2.50 cm and mass M_1 =0.80 kg and the other with radius R_2 = 5.00 cm and mass M_2=1.60kg, are welded together and mounted on a frictionless axis through their common center.

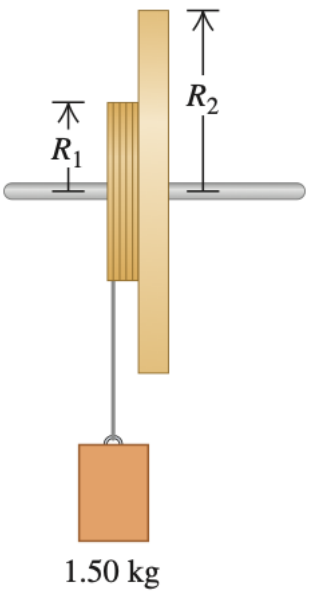

   a. What is the total moment of inertia of the two disks?
   b. A light string is wrapped around the edge of the smaller disk, and a 1.50 kg block is suspended from the free end of the string. If the block is released from rest at a distance of 2.00 m above the floor, what is its speed just before it strikes the floor?
   c. Repeat part (b), this time with the string wrapped around the edge of the larger disk. In which case is the final speed of the block greater? Explain.

5. Two astronauts, each having a mass of 75.0 kg, are connected by a 10.0-m rope of negligible mass. They are isolated in space, moving in circles around the point halfway between them at a speed of 5.00 m/s. Treat the astronauts as particles.
    a. Calculate the magnitude of the angular momentum.
    b. Calculate the rotational energy of the system.

    By pulling on the rope, the astronauts shorten the distance between them to 5.00 m.
    c. What is the new angular momentum of the system?
    d. What are their new speeds?
    e. What is the new rotational energy of the system?
    f. How much work is done by the astronauts in shortening the rope?

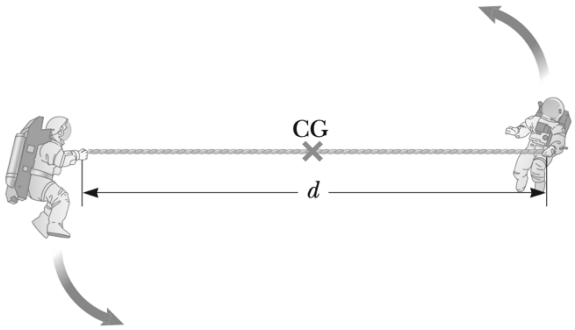

Extra Space/Scratch work

Extra Space/Scratch work

Exam 1
Physics 23

Version 1

Chapters 12, 15, 16

Your test has 5 problems, each worth 20 points.

Some useful constants:
Atmospheric pressure at sea level: 101,325 Pa
Density of Fresh Water: ~1000 kg/m^3
Density of air at sea level: 1.204 kg/m^3

Name:

_____

1. A large rock that weighs 164.0 N is suspended from the lower end of a thin wire that is 3.00 m long. The density of the rock is 3200 kg/m^3. The mass of the wire is small enough that its effect on the tension in the wire can be ignored. The upper end of the wire is held fixed. When the rock is in air, the fundamental frequency for transverse standing waves on the wire is 42.0 Hz. When the rock is totally submerged in a liquid, with the top of the rock just below the surface, the fundamental frequency for the wire is 28.0 Hz. What is the density of the liquid? Draw diagrams of the rock suspended in air and in the liquid.

2. A barge is in a rectangular lock on a freshwater river. (You can picture the lock as a very large bathtub containing the barge.) The lock is 60.0 m long and 20.0 m wide, and the steel doors on each end are closed. With the barge floating in the lock, a 2.50×10^6 N load of scrap metal is put into the barge. The scrap metal has density 7200 kg/m^3.
    a. When the load of scrap metal, initially on the bank, is placed onto the barge, what vertical distance does the water in the lock rise?
    b. The scrap metal is now pushed overboard into the water. Does the water level in the lock rise, fall, or remain the same? If it rises or falls, by what vertical distance does it change?

3. A 1.80-m-long uniform bar that weighs 638 N is suspended in a horizontal position by two vertical wires that are attached to the ceiling. One wire is aluminum ($\rho_{Al} = 2.70 \times 10^3\ kg/m^3$) and the other is copper ($\rho_{Cu} = 8.90 \times 10^3\ kg/m^3$). The aluminum wire is attached to the left-hand end of the bar, and the copper wire is attached 0.40 m to the left of the right-hand end. Each wire has length 0.600 m and a circular cross section with radius 0.280 mm. What is the fundamental frequency of transverse standing waves for each wire?
(Hint: the tension in each wire is different and the metal bar is in equilibrium)

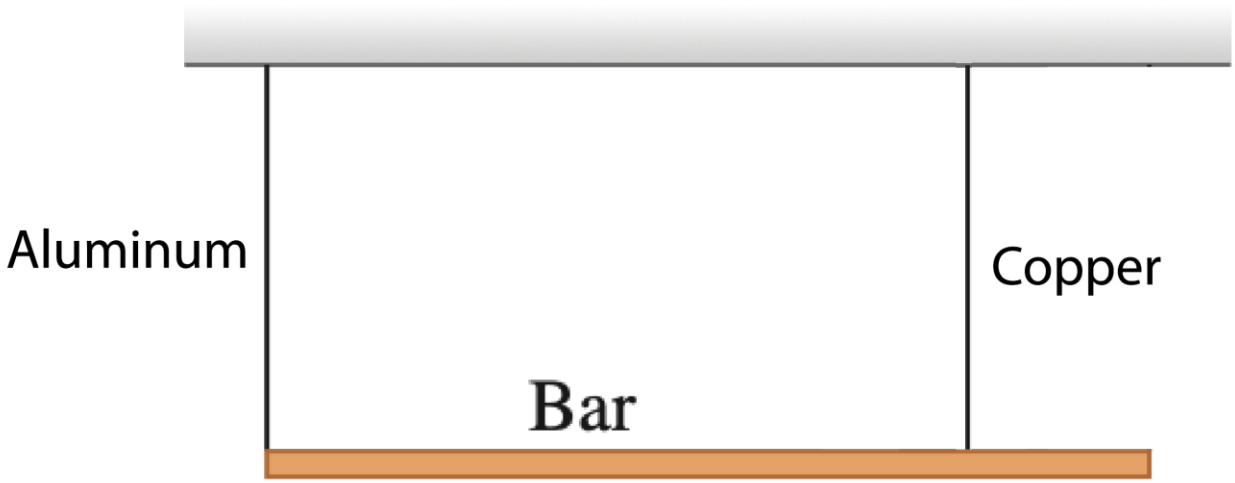

4. A 2.00 MHz sound wave travels through a pregnant woman's abdomen and is reflected from the fetal heart wall of her unborn baby. The heart wall is moving toward the sound receiver as the heart beats. The reflected sound is then mixed with the transmitted sound, and 72 beats per second are detected. The speed of sound in body tissue is 1500 m/s. Calculate the speed of the fetal heart wall at the instant this measurement is made.

5. The sound from a trumpet radiates uniformly in all directions in 20°C air. At 5.00 m from the trumpet the sound intensity level is 52.0 dB. The frequency is 587 Hz.
    a. What is the pressure amplitude at this distance?
    b. What is the displacement amplitude?
    c. At what distance is the sound intensity level 30.0 dB?

    Use the bulk modulus of air as $B = 1.42 \times 10^5$ Pa

Exam 2
Physics 21

Chapters 17 – 18

Name:

_____

Your test has 5 problems, each worth 20 points.

Some useful constants:
Acceleration due to gravity: $g = 9.80\ m/s^2$
$1\ atm = 1.013 \times 10^5\ Pa$
Gas constant: 8.314 J/mol•K

1. Modern vacuum pumps make it easy to attain pressures of the order of 10^{-13} atm in the laboratory. Consider a volume of air and treat the air as an ideal gas.
    a. At a pressure of 9.00×10^{-14} atm and an ordinary temperature of 300.0 K, how many molecules are present in a volume of $1.00\ cm^3$?
    b. How many molecules would be present at the same temperature but at 1.00 atm instead?
    c. Let compare this lab to astrophysical example, the Lagoon Nebula. The Lagoon Nebula is a cloud of hydrogen gas (molar mass of 2.016 g/mol) located 3900 light-years from the earth. The cloud is about 45 light-years in diameter and glows because of its high temperature of 7500 K. (The gas is raised to this temperature by the stars that lie within the nebula.) The cloud is also very thin; there are only 80 molecules per cubic centimeter. Find the gas pressure (in atmospheres) in the Lagoon Nebula. Compare it to the laboratory pressure in part (a).

    d. Science-fiction films sometimes show starships being buffeted by turbulence as they fly through gas clouds such as the Lagoon Nebula. Does this seem realistic? Why or why not?

Use 1 atm = 1.013×10^5 Pa, $1\ cm^3 = 1.00 \times 10^{-6}\ m^3$,
$N_A = 6.022 \times 10^{23} particle/mole$

2. A steel wire has density 7800 kg/m^3 and mass 2.50 g. It is stretched between two rigid supports separated by 0.400 m.
    a. When the temperature of the wire is 20.0°C, the frequency of the fundamental standing wave for the wire is 440 Hz. What is the tension in the wire?
    b. What is the temperature of the wire if its fundamental standing wave has frequency 460 Hz? For steel the coefficient of linear expansion is $1.2 \times 10^{-5}\ K^{-1}$ and Young's modulus is 20×10^{10} Pa.
    Hint 1: if the steel wire is already under tension, would the temperature need to increase or decrease for the fundamental frequency to increase?
    Hint 2: The "F" in thermal stress equation is not the tension directly.
    This is why your favorite band needs to tune their instruments in every new venue.

3. A carpenter builds an exterior house wall with a layer of wood 3.0 cm thick on the outside and a layer of Styrofoam insulation 2.2 cm thick on the inside wall surface. The wood has k = 0.080 W/m•K, and the Styrofoam has k = 0.027 W/m•K. The interior surface temperature is 19.0°C, and the exterior surface temperature is –10.0°C.
    a. What is the temperature at the plane where the wood meets the Styrofoam?
    b. What is the rate of heat flow per square meter through this wall?

4. A thirsty nurse cools a 2.00 L bottle of a soft drink (mostly water) by pouring it into a large aluminum mug of mass 0.257 kg and adding 0.120 kg of ice initially at –15.0°C. If the soft drink and mug are initially at 20.0°C, what is the final temperature of the system, assuming that no heat is lost?
   The specific heat of the aluminum c_a = 910 J/kg•K
   For liquid water c_w = 4190 J/kg•K
   For solid ice c_i = 2100 J/kg•K
   Latent heat of fusion of water: $L_f = 3.35 \times 10^5$ J/kg•K
   Density of water: $\rho = 1.00 \times 10^3$ kg/m^3

5. A light, plastic sphere with mass m = 9.00 g and density $\rho = 4.00$ kg/m^3 is suspended in air by thread of negligible mass.
    a. What is the tension F_T in the thread if the air is at 5.00°C and p = 1.00 atm? The molar mass of air is 28.8 g/mol. Hint: You need to find the density of air as a function of temperature.
    b. How much does the tension in the thread change if the temperature of the gas is increased to 35.0°C? Ignore the change in volume of the plastic sphere when the temperature is changed. Assume that the ambient pressure remains constant.

Exam 3
Physics 23

Chapters 19 – 20

Name:

_____

Your test has 5 problems, each worth 20 points.

R = 8.3145 $\frac{J}{K \bullet mol}$, 1 atm = 1.013×10^5 Pa, 0°C = 273.15 K

1. A large research balloon containing 2.00×10^3 m^3 of helium gas at 1.00 atm and a temperature of 15.0°C rises rapidly from ground level to an altitude at which the atmospheric pressure is only 0.900 atm. Assume the helium behaves like an ideal gas and the balloon's ascent is too rapid to permit much heat exchange with the surrounding air.
    a. Calculate the volume of the gas at the higher altitude.
    b. Calculate the temperature of the gas at the higher altitude.
    c. What is the change in internal energy of the helium as the balloon rises to the higher altitude?

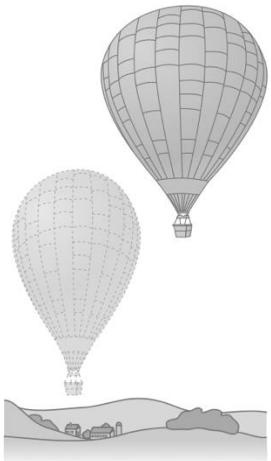

2. A player bounces a basketball on the floor, compressing it to 80.0% of its original volume. The air (assume it is pure N_2 gas, molar mass of 28.01 g/mol) inside the ball is originally at 20.0°C and 2.00 atm. The ball's inside **diameter** is 23.9 cm.
    a. What is the heat capacity at constant volume and the ratio of heat capacities?
    b. What temperature does the air in the ball reach at its maximum compression? Assume the compression is adiabatic and treat the gas as ideal.
    c. By how much does the internal energy of the air change between the ball's original state and its maximum compression?

R = 8.3145 $\frac{J}{K \bullet mol}$, 1 atm = 1.013×10^5 Pa, 0°C = 273.15 K

3. One-third of a mole of He gas is taken along the path abc shown in the figure. Assume that the gas may be treated as ideal.
    a. Along path abc, how much heat is transferred into or out of the gas?
    b. If the gas instead went directly from state a to state c along the horizontal dashed line, how much heat would be transferred into or out of the gas?
    c. How does Q in part (b) compare with Q in part (a)? Explain.

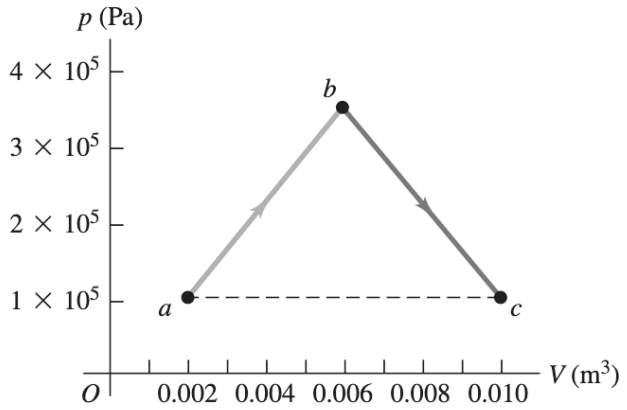

4. What is the thermal efficiency of an engine that takes n moles of diatomic ideal gas through the cycle 1 → 2 → 3 → 4 as shown the figure?

Hint: Find the heat Q and work W for each step in the process.

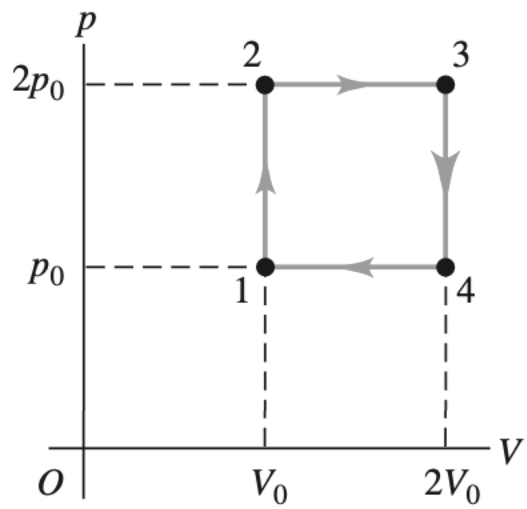

5. One winter evening you fill a pint-sized (0.474 L = 4.74×10^{-4} m^3) plastic cup with ice and water to drink before going to bed. You filled the cup with ¼ ice and ¾ liquid water. (Hint: Use the densities of ice and liquid water to find the mass of each.) You set the cup on the kitchen counter, forget about it, and go to bed. The air in the kitchen is maintained at a constant 22.2°C by th central heating system of your apartment. When you wake up in the morning, the cup contains liquid water at 22.2°C.
    a. What is the entropy change of the ice water during the process in which it went from 0°C to liquid water at 22.2°C as you slept?
    b. What is the entropy change of the air in the room due to the heat that flows from it into the contents of the cup?
    c. What is the total entropy change of the air–ice water system due to the heat exchange that changes the phase and temperature of the ice water? Is the total entropy change positive or negative?

The latent heat of fusion for water is $3.33 \times 10^5 \frac{J}{kg}$.

The heat capacity of liquid water is $4190 \frac{J}{kg \bullet K}$ (assumed to be constant)

The heat capacity of ice is $2108 \frac{J}{kg \bullet K}$ (assumed to be constant)

The density of ice at 0°C: $\rho_{ice} = 920 \frac{kg}{m^3}$

The density of liquid water at 0°C: $\rho_w = 1000 \frac{kg}{m^3}$

Extra Credit (7.5 points)

6. Consider the Universe to be spherical, mostly hydrogen gas molecules undergoing adiabatic expansion over its lifetime.
    a. The current Universe extends at least 15 billion light-years in all directions ($r = 1.4 \times 10^{26}$ m), and the current temperature of the Universe is 2.7 K. Estimate the temperature of the Universe when it was the size of a nutshell, with a radius of 2 cm. (For this calculation, assume the Universe is spherical.) (2.5 points)
    b. If the density of the gas in the Universe, N/V, is one hydrogen atom per cubic meter, calculate the current pressure of the Universe. (2.5 points)
    c. Estimate the pressure of the Universe when it was the size of a nutshell. (2.5 points)

(Be careful: Calculator overflow can occur.)

Physics 23
Final Exam

Name:

_____

Your test has 12 problems, each worth 20 points for a total of 300 points.

Some useful constants:

g = 9.80 m/s^2, R = 8.3145 $\frac{J}{K \bullet mol}$, 1 atm = 1.013×10^5 Pa,
0°C = 273.15 K, $\rho_{water} = 1000\ \frac{kg}{m^3}$,

Assume the speed of sound in air is v = 344 m/s

Assume all wavelengths of light given are in vacuum unless otherwise stated.

1 mm = 10^{-3} m, 1 nm = 10^{-9} m, 1 μm = 10^{-6} m

1. Heart Sonogram. Physicians use high-frequency ($f = 195$ MHz) sound waves, called ultrasound, to image internal organs. The speed of these ultrasound waves is 1480 m/s in muscle and 344 m/s in air. We define the index of refraction of a material for sound waves to be the ratio of the speed of sound in air to the speed of sound in the material. Snell's law then applies to the refraction of sound waves.

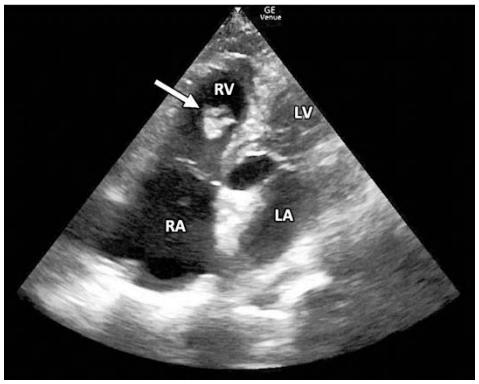

   a. At what angle from the normal does an ultrasound beam enter the heart (assume to be pure muscle) if it leaves the lungs (assume to be pure air) at an angle of 9.73° from the normal to the heart wall? (Assume that the speed of sound in the lungs is 344 m/s.)
   b. What is the critical angle for sound waves in air incident on muscle?

2. The refractive index of a certain glass is 1.66. For what incident angle is light reflected from the surface of this glass completely polarized if the glass is immersed in
    a. Air ($n \approx 1$) and
    b. Water ($n = 1.333$)?

(Hint: The reflected ray is completely polarized when the refracted ray and reflected ray make a 90° angle, this is NOT total internal reflection.)

3. A 1.20-cm-tall object is 50.0 cm to the left of a converging lens of focal length 40.0 cm. A second converging lens, this one having a focal length of 60.0 cm, is located 300.0 cm to the right of the first lens along the same optic axis.
    a. Find the location and height of the image (call it I_1) formed by the lens with a focal length of 40.0 cm.
    b. I_1 is now the object for the second lens. Find the location and height of the image produced by the second lens. This is the final image produced by the combination of lenses. What is distance that final image measured from the **first** lens.
    c. Draw a ray diagram with the principle rays for **each** lens.

4. The left end of a long glass rod 6.00 cm in diameter has a convex hemispherical surface 3.00 cm in radius. The refractive index of the glass is 1.60. Determine the position of the image if an object is placed in air on the axis of the rod at the following distances to the left of the vertex of the curved end:
    a. infinitely far;
    b. 12.0 cm;
    c. 2.00 cm.

5. Coherent light with wavelength 400 nm passes through two very narrow slits that are separated by 0.200 mm, and the interference pattern is observed on a screen 4.00 m from the slits.
    a. What is the width (in mm) of the central interference maximum?
    b. What is the width of the first-order bright fringe?

6. Monochromatic electromagnetic radiation with wavelength λ from a distant source passes through a slit. The diffraction pattern is observed on a screen 2.50 m from the slit. If the width of the central maximum is 6.00 mm, what is the slit width a if the wavelength is
    a. 500 nm (visible light);
    b. 50.0 μm (infrared radiation);
    c. 0.500 nm (x rays)?

7. If a diffraction grating produces a third-order bright spot for red light (of wavelength 700 nm) at 65.0° from the central maximum, at what angle will the second-order bright spot be for violet light (of wavelength 400 nm)?

   (Hint: The condition for maximum intensity in the interference pattern is the same as for the two-source pattern, but the maxima for the grating are very sharp and narrow.)

8. When viewing a piece of art that is behind glass, one often is affected by the light that is reflected off the front of the glass (called glare), which can make it difficult to see the art clearly. One solution is to coat the outer surface of the glass with a film to cancel part of the glare.
    a. If the glass has a refractive index of 1.62 and you use TiO_2, which has an index of refraction of 2.62, as the coating, what is the minimum film thickness that will cancel light of wavelength 505 nm?
    b. If this coating is too thin to stand up to wear, what other thickness would also work for this wavelength of light? Find only the three thinnest ones.

9. A Carnot engine is operated between two heat reservoirs at temperatures of 520 K and 300 K.
    a. If the engine receives 6.45 kJ of heat energy from the reservoir at 520 K in each cycle, how many joules per cycle does it discard to the reservoir at 300 K?
    b. How much mechanical work is performed by the engine during each cycle?
    c. What is the thermal efficiency of the engine?

10. A soft drink (mostly water) flows in a pipe at a beverage plant with a mass flow rate that would fill 220 0.355-L (1 L = 10^{-3} m^3) cans per minute. At point 2 in the pipe, the gauge pressure is 152 kPa and the cross-sectional area is 8.00 cm^2. At point 1, 1.35 m above point 2, the cross-sectional area is 2.00 cm^2. Find the
    a. mass flow rate;
    b. volume flow rate;
    c. flow speeds at points 1 and 2;
    d. gauge pressure at point 1.

11. You blow across the open mouth of an empty test tube and produce the fundamental standing wave in the 14.0-cm-long air column in the test tube, which acts as a stopped pipe. Assume the speed of sound in air is 344 m/s.

    a. What is the frequency of this standing wave?
    b. What is the frequency of the fundamental standing wave in the air column if the test tube is half filled with water?

12. A bar of gold (Au) is in thermal contact with a bar of silver (Ag) of the same length and area. One end of the compound bar is maintained at 80.0°C, Insulation and the opposite end is at 30.0°C. Find the temperature at the junction when the energy flow reaches a steady state.

The thermal conductivities of the metals are:

$$\kappa_{gold} = 314\ \frac{J}{m \cdot s \cdot K}$$

$$\kappa_{silver} = 427\ \frac{J}{m \cdot s \cdot K}$$

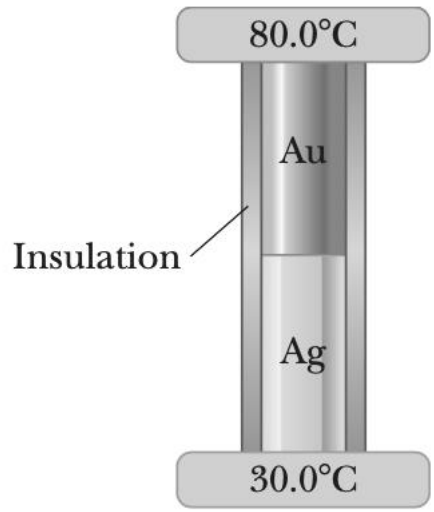

Fall 2024 Kevin Roberts Evaluation Packet

Final Audit Report 2024-12-19

Created:	2024-12-17 (Pacific Standard Time)
By:	Jennifer Hsieh (HSIEH_JENNIFER@smc.edu)
Status:	Signed
Transaction ID:	CBJCHBCAABAAq3VZG5qyltYysjgm6DrXH-6z-mRwXhee

"Fall 2024 Kevin Roberts Evaluation Packet" History

Document created by Jennifer Hsieh (HSIEH_JENNIFER@smc.edu)
2024-12-17 - 3:43:16 PM PST- IP address: 70.93.41.98

Document emailed to Jennifer Hsieh (HSIEH_JENNIFER@smc.edu) for signature
2024-12-17 - 3:49:34 PM PST

Document e-signed by Jennifer Hsieh (HSIEH_JENNIFER@smc.edu)
Signature Date: 2024-12-17 - 3:51:33 PM PST - Time Source: server- IP address: 70.93.41.98

Document emailed to FOROUZAN FARIDIAN (faridian_forouzan@smc.edu) for signature
2024-12-17 - 3:51:40 PM PST

Email viewed by FOROUZAN FARIDIAN (faridian_forouzan@smc.edu)
2024-12-17 - 4:32:39 PM PST- IP address: 172.226.184.27

Document e-signed by FOROUZAN FARIDIAN (faridian_forouzan@smc.edu)
Signature Date: 2024-12-17 - 4:33:57 PM PST - Time Source: server- IP address: 47.144.182.87

Document emailed to Emin Menachekanian (MENACHEKANIAN_EMIN@smc.edu) for signature
2024-12-17 - 4:34:01 PM PST

Email viewed by Emin Menachekanian (MENACHEKANIAN_EMIN@smc.edu)
2024-12-17 - 4:34:14 PM PST- IP address: 66.249.84.71

Document e-signed by Emin Menachekanian (MENACHEKANIAN_EMIN@smc.edu)
Signature Date: 2024-12-17 - 4:38:31 PM PST - Time Source: server- IP address: 69.162.16.6

Document emailed to KEVIN31 ROBERTS (ROBERTS_KEVIN31@smc.edu) for signature
2024-12-17 - 4:38:36 PM PST

Email viewed by KEVIN31 ROBERTS (ROBERTS_KEVIN31@smc.edu)
2024-12-17 - 8:59:21 PM PST- IP address: 8.3.94.177

SANTA MONICA COLLEGE

Powered by Adobe Acrobat Sign

Document e-signed by KEVIN31 ROBERTS (ROBERTS_KEVIN31@smc.edu)

Signature Date: 2024-12-17 - 9:01:15 PM PST - Time Source: server- IP address: 8.3.94.177

Document emailed to evaluations@smc.edu for acceptance

2024-12-17 - 9:01:21 PM PST

Email viewed by evaluations@smc.edu

2024-12-19 - 8:47:25 AM PST- IP address: 104.47.55.126

Signer evaluations@smc.edu entered name at signing as Kristine Herrera

2024-12-19 - 8:47:35 AM PST- IP address: 204.102.230.69

Document accepted by Kristine Herrera (evaluations@smc.edu)

Acceptance Date: 2024-12-19 - 8:47:37 AM PST - Time Source: server- IP address: 204.102.230.69

Agreement completed.

2024-12-19 - 8:47:37 AM PST

SANTA MONICA COLLEGE

Powered by Adobe Acrobat Sign